document A

WAAS CH 53540 W33A	APP CRS 341°	Rwy ldg 3500 TDZE 1511 Apt Elev 1511

RNAV (GPS) RWY 33
LAKOTA MUNI (5LØ)

RNP APCH - GPS.

Baro-VNAV NA. Rwy 33 helicopter visibility reduction below ¾ SM NA.
NA Circling Rwy 15 NA at night. Use Devils Lake altimeter setting.

MISSED APPROACH: Climb to 2300 then climbing left turn to 3300 direct NERDE and hold.

DVL AWOS-3PT	MINNEAPOLIS CENTER	UNICOM
125.875	132.15 269.6	122.8 (CTAF) L

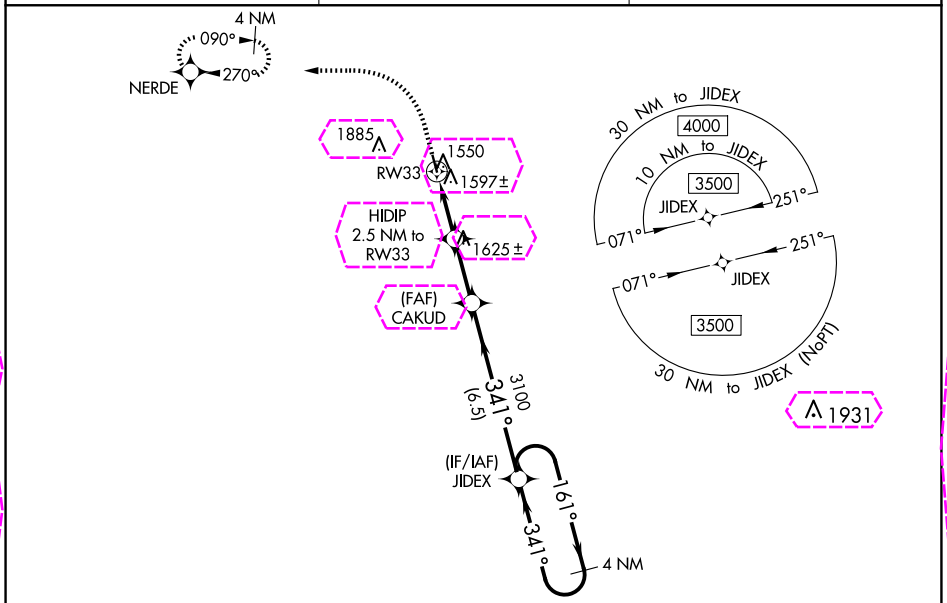

NC-1, 10 JUL 2025 to 07 AUG 2025

ELEV 1511 TDZE 1511

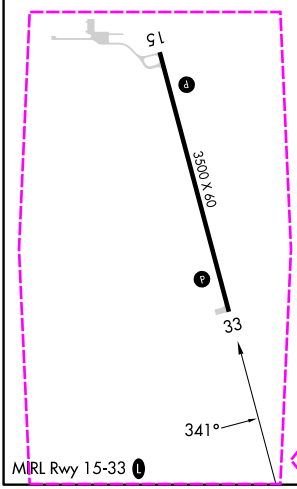

MIRL Rwy 15-33 L

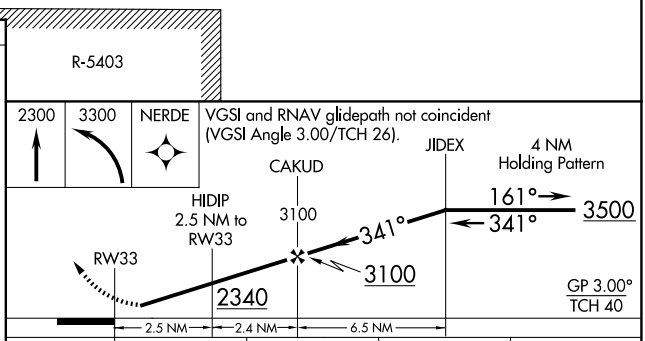

CATEGORY	A	B	C	D
LPV DA	1827-1⅛ 316 (400-1⅛)			NA
LNAV/VNAV DA	1827-1⅛ 316 (400-1⅛)			NA
LNAV MDA	1920-1 409 (500-1)		1920-1⅛ 409 (500-1⅛)	NA
C CIRCLING	2080-1 569 (600-1)	2200-1 689 (700-1)	2320-2¼ 809 (900-2¼)	NA

document B

WAAS CH 53540 W33A	APP CRS 341°	Rwy Ldg 3500 TDZE 1511 Apt Elev 1511

RNAV (GPS) RWY 33
LAKOTA MUNI (5LØ)

RNP APCH - GPS.

Baro-VNAV NA. Rwy 33 helicopter visibility reduction below ¾ SM NA.
NA Circling Rwy 15 NA at night. Use Devils Lake altimeter setting.

MISSED APPROACH: Climb to 2300 then climbing left turn to 3300 direct NERDE and hold.

DVL AWOS-3PT	MINNEAPOLIS CENTER	UNICOM
125.875	132.15 269.6	122.8 (CTAF) L

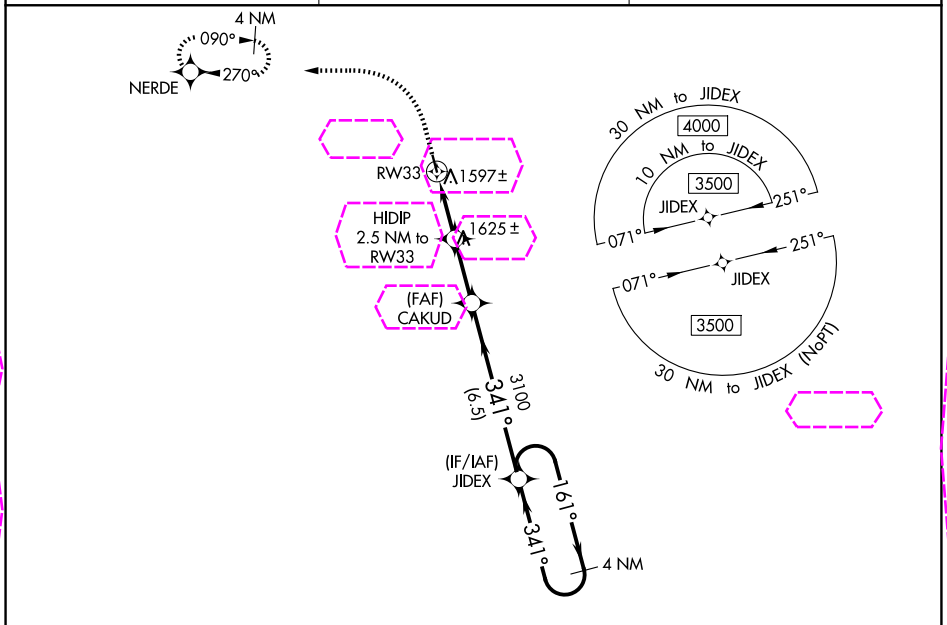

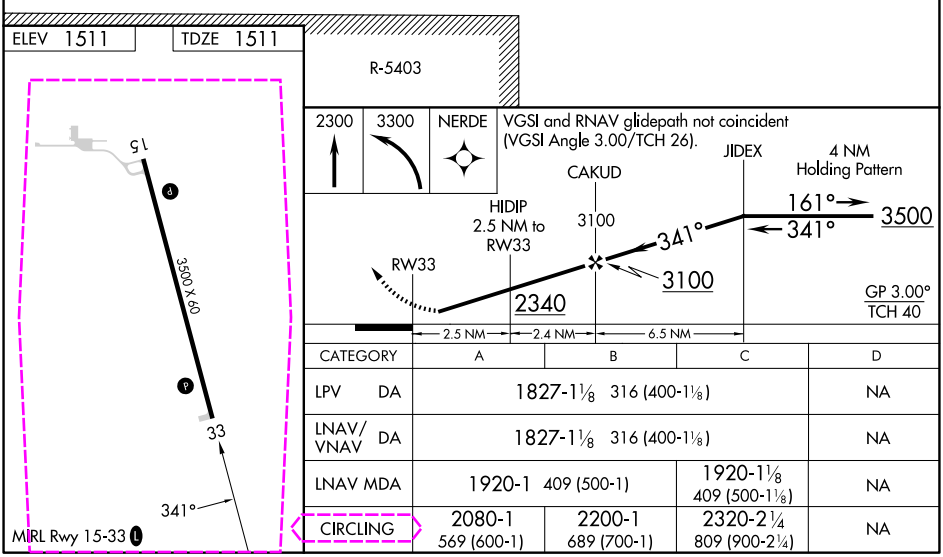

CATEGORY		A	B	C	D
LPV	DA	1827-1⅛ 316 (400-1⅛)			NA
LNAV/VNAV	DA	1827-1⅛ 316 (400-1⅛)			NA
LNAV	MDA	1920-1 409 (500-1)		1920-1⅛ 409 (500-1⅛)	NA
CIRCLING		2080-1 569 (600-1)	2200-1 689 (700-1)	2320-2¼ 809 (900-2¼)	NA

NC-1, 07 AUG 2025 to 04 SEP 2025
NC-1, 07 AUG 2025 to 04 SEP 2025