document A

RNAV (GPS) RWY 27
PORTLAND MUNI (PLD)

WAAS CH 73025 W27A	APP CRS 272°	Rwy ldg 5505 TDZE 925 Apt Elev 925

RNP APCH - GPS.

Rwy 27 helicopter visibility reduction below 1 SM NA.
Straight-in Rwy 27 NA at night, Circling Rwy 27 NA at night.

MISSED APPROACH: Climb to 2500 direct DIYEC and hold.

AWOS-3	FORT WAYNE APP CON	UNICOM
124.675	132.15 (SE/NE) 284.6 127.2 (SW/NW) 284.6	122.8 (CTAF) L

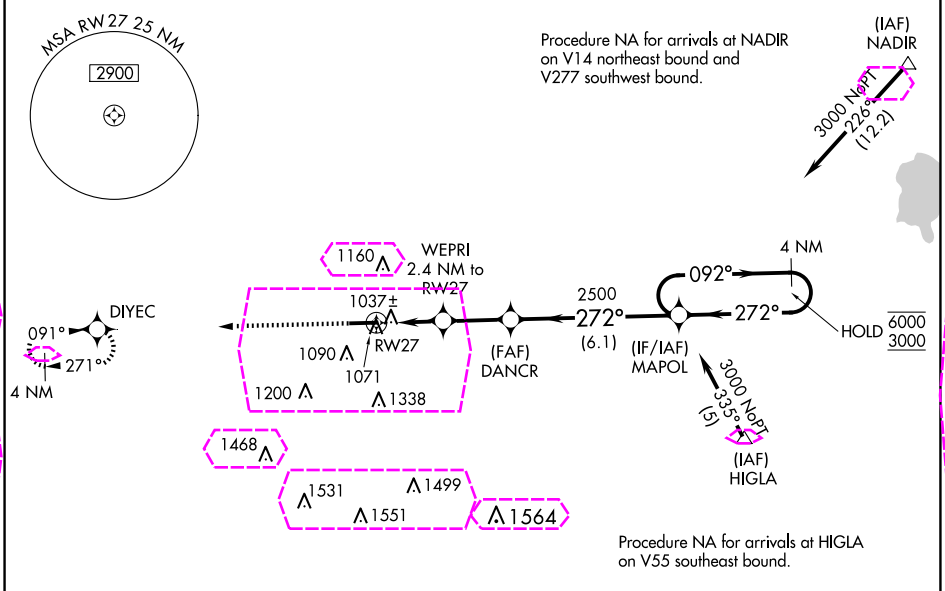

ELEV 925 TDZE 925

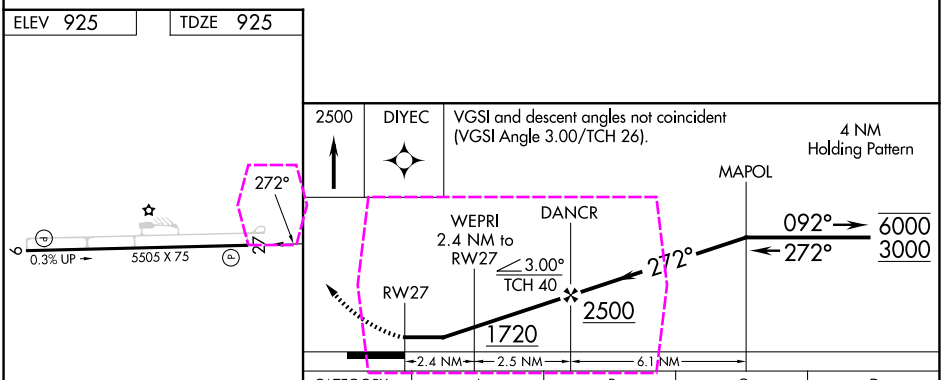

CATEGORY	A	B	C	D
LP MDA	1300-1 375 (400-1)			
LNAV MDA	1380-1 455 (500-1)		1380-1⅜ 455 (500-1⅜)	
CIRCLING	1480-1 555 (600-1)		1580-1¾ 655 (700-1¾)	1640-2¼ 715 (800-2¼)

MIRL Rwy 9-27 L
REIL Rwys 9 and 27 L

EC-2, 10 JUL 2025 to 07 AUG 2025

EC-2, 10 JUL 2025 to 07 AUG 2025

document B

RNAV (GPS) RWY 27
PORTLAND MUNI (PLD)

WAAS CH 73025 W27A	APP CRS 272°	Rwy Ldg 5505 TDZE 925 Apt Elev 925

RNP APCH - GPS.

Rwy 27 helicopter visibility reduction below ¾ SM NA.
VDP NA when using FWA altimeter setting.

MISSED APPROACH: Climb to 2500 direct DIYEC and hold.

AWOS-3	FORT WAYNE APP CON	UNICOM
124.675	132.15 (SE/NE) 284.6 127.2 (SW/NW) 284.6	122.8 (CTAF) L

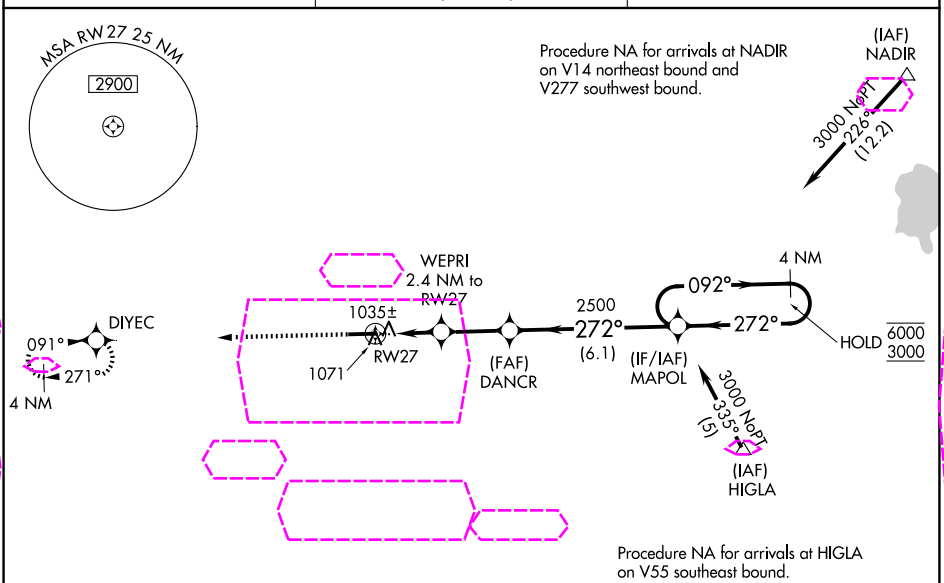

EC-2, 07 AUG 2025 to 04 SEP 2025

EC-2, 07 AUG 2025 to 04 SEP 2025

ELEV 925 TDZE 925

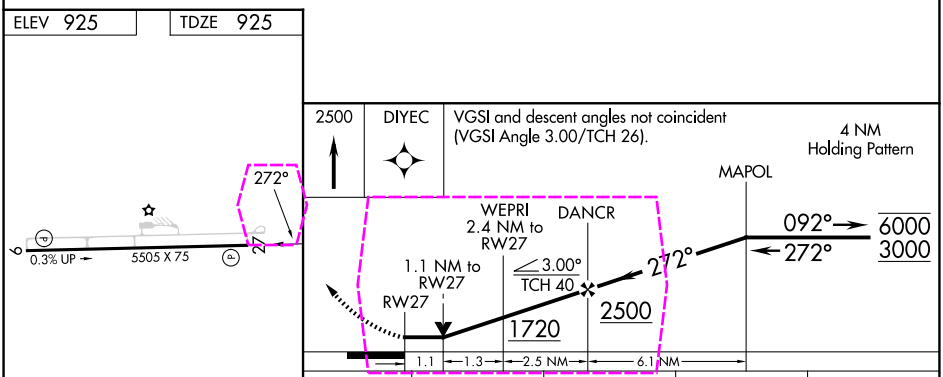

CATEGORY	A	B	C	D
LP MDA	1300-1 375 (400-1)			
LNAV MDA	1380-1 455 (500-1)		1380-1⅜ 455 (500-1⅜)	
CIRCLING	1480-1 555 (600-1)		1580-1¾ 655 (700-1¾)	1640-2¼ 715 (800-2¼)

MIRL Rwy 9-27 L
REIL Rwys 9 and 27 L