document A

RNAV (GPS) RWY 33
ROBERT GRAY AAF (GRK)

WAAS CH 82399 W33A	APP CRS 333°	Rwy ldg 9803 TDZE 995 Apt Elev 1015

RNP APCH - GPS.

ASR/PAR: For uncompensated Baro-VNAV systems, LNAV/VNAV NA below -17°C or above 54°C. Circling NA west of Rwy 15-33. For inop ALS, increase LPV Cat E visibility to ¾ SM, LNAV/VNAV Cat E visibility to 2 SM, and LNAV Cat E visibility to 1½ SM.

MALSR

MISSED APPROACH: Climb to 3000 direct FIXUL and on track 283° to AGJ VORTAC and hold.

ATIS	GRAY APP CON	GRAY TOWER	GND CON	CLNC DEL
124.9	120.075 323.15	120.75 (CTAF) 285.5	121.8 279.5	126.2 251.1

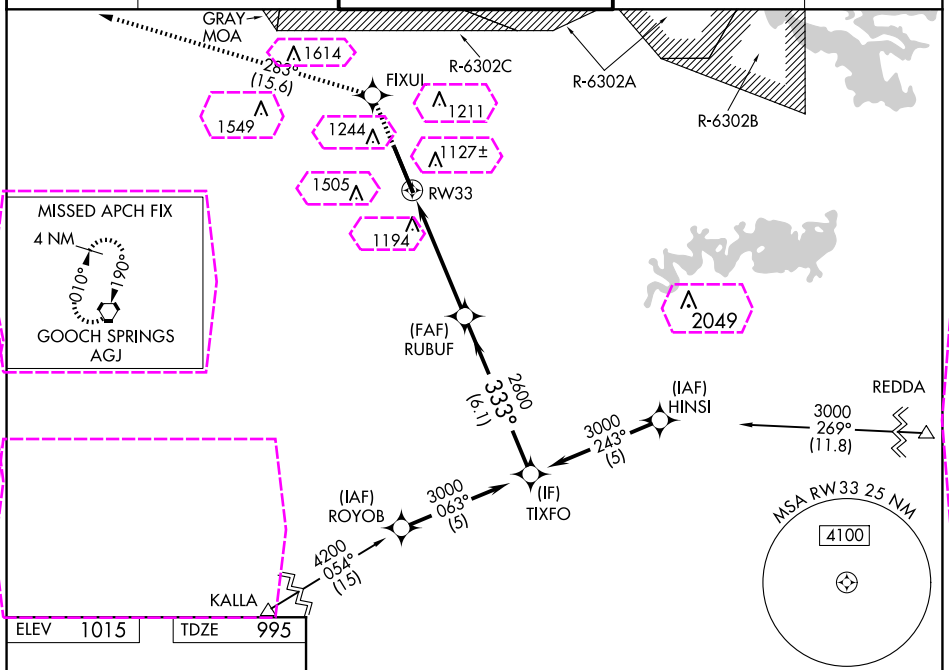

SC-3, 10 JUL 2025 to 07 AUG 2025

SC-3, 10 JUL 2025 to 07 AUG 2025

ELEV 1015	TDZE 995

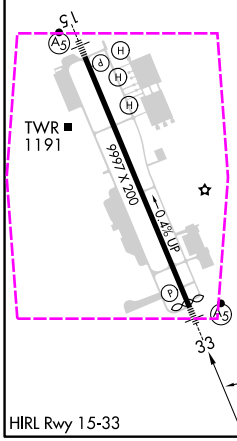

HIRL Rwy 15-33

3000	FIXUL	tr 283°	AGJ

VGSI and RNAV glidepath not coincident (VGSI Angle 3.00/TCH 50).

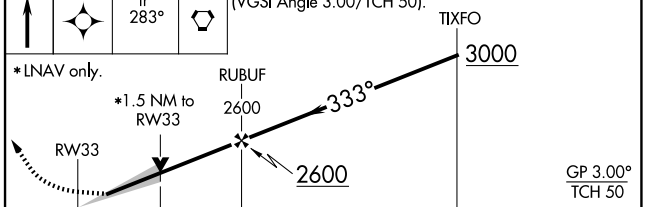

CATEGORY	A	B	C	D	E
LPV DA	1195-½ 200 (200-½)				
LNAV/VNAV DA	1552-1½ 557 (600-1½)				
LNAV MDA	1460-½ 465 (500-½)	1460-1 465 (500-1)			
C CIRCLING	1540-1 525 (600-1)	1560-1½ 545 (600-1½)	1620-2 605 (700-2)	1740-2½ 725 (800-2½)	

document B

RNAV (GPS) RWY 33
ROBERT GRAY AAF (GRK)

WAAS CH 82399 W33A	APP CRS 333°	Rwy Ldg 9803 TDZE 995 Apt Elev 1015

RNP APCH - GPS.

ASR/PAR: For uncompensated Baro-VNAV systems, LNAV/VNAV NA below -17°C or above 54°C. Circling NA west of Rwy 15-33. For inop ALS, increase LPV Cat E visibility to ¾ SM, LNAV/VNAV Cat E visibility to 2 SM, and LNAV Cat E visibility to 1½ SM.

MALSR

MISSED APPROACH: Climb to 3000 direct FIXUL and on track 283° to AGJ VORTAC and hold.

ATIS	GRAY APP CON	GRAY TOWER	GND CON	CLNC DEL
124.9	120.075 323.15	120.75 (CTAF) 285.5	121.8 279.5	126.2 251.1

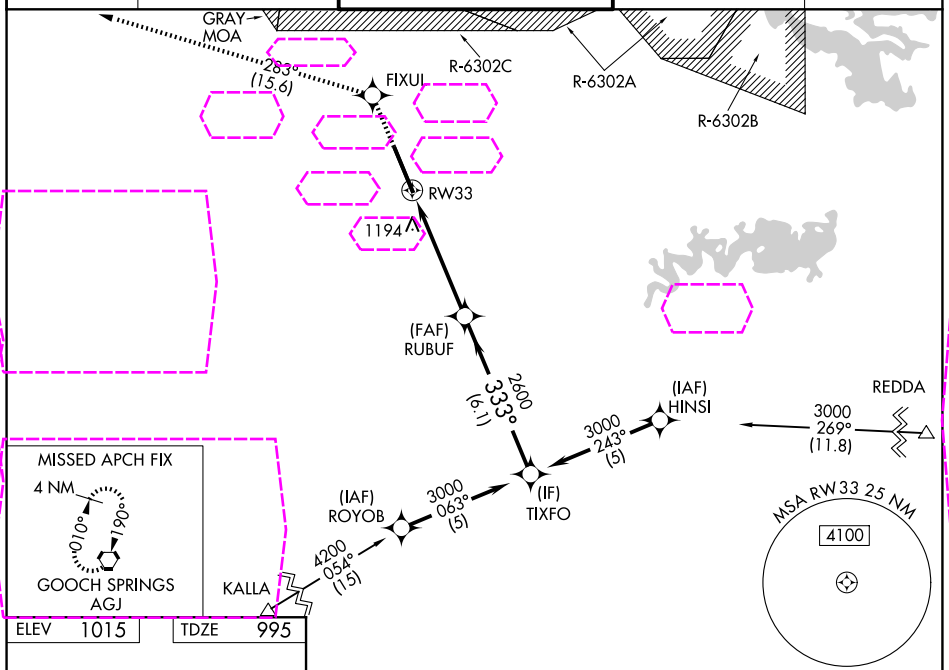

ELEV 1015 TDZE 995

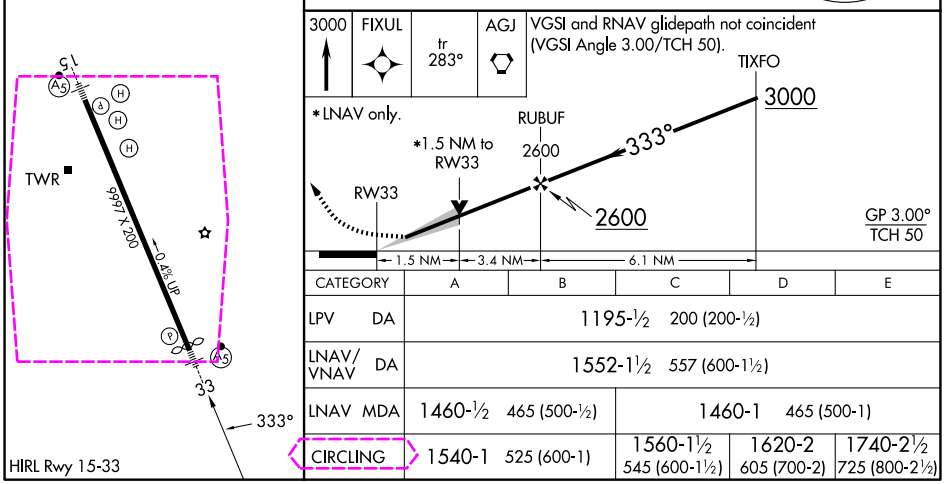

CATEGORY	A	B	C	D	E
LPV DA	1195-½ 200 (200-½)				
LNAV/VNAV DA	1552-1½ 557 (600-1½)				
LNAV MDA	1460-½ 465 (500-½)	1460-1 465 (500-1)			
CIRCLING	1540-1 525 (600-1)		1560-1½ 545 (600-1½)	1620-2 605 (700-2)	1740-2½ 725 (800-2½)

HIRL Rwy 15-33

SC-3, 07 AUG 2025 to 04 SEP 2025

SC-3, 07 AUG 2025 to 04 SEP 2025