document A

APP CRS	Rwy ldg	6190
262°	TDZE	3927
	Apt Elev	3931

RNAV (GPS) RWY 26
ALLIANCE MUNI (AIA)

RNP APCH.

MISSED APPROACH: Climb to 6000 direct WAKPA and hold.

ASOS	DENVER CENTER	UNICOM
135.075	127.95 338.2	123.0 (CTAF) L

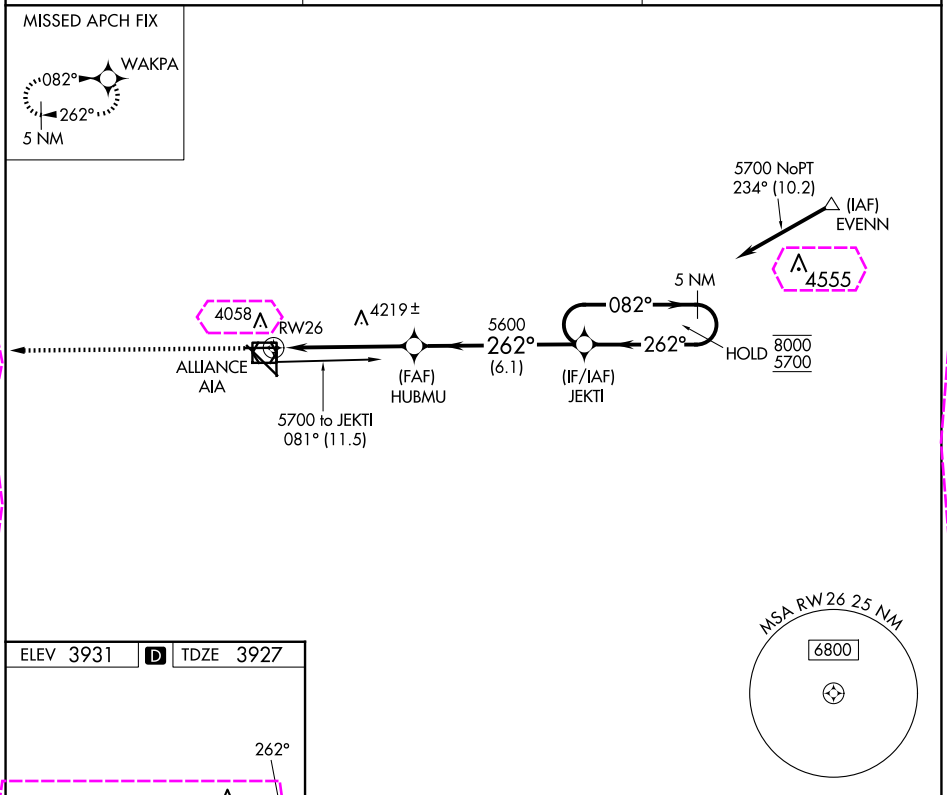

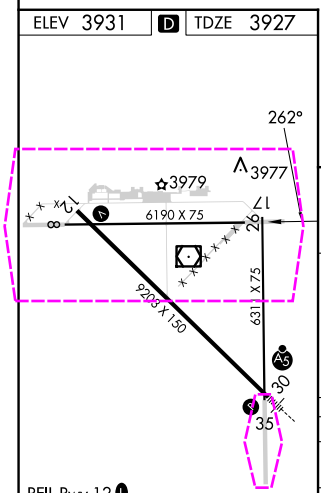

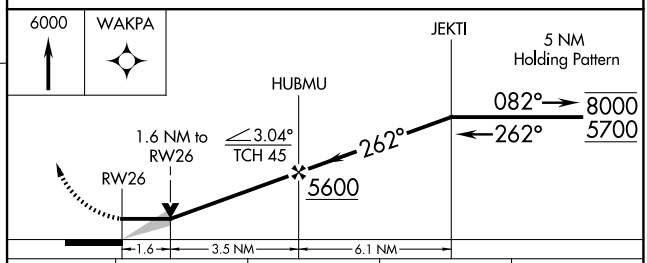

CATEGORY	A	B	C	D
LNAV MDA	4480-1 553 (600-1)		4480-1⅝ 553 (600-1⅝)	4480-1¾ 553 (600-1¾)
CIRCLING	4480-1 549 (600-1)	4520-1 589 (600-1)	4580-1¾ 649 (700-1¾)	4640-2¼ 709 (800-2¼)

NC-2, 10 JUL 2025 to 07 AUG 2025

NC-2, 10 JUL 2025 to 07 AUG 2025

document B

RNAV (GPS) RWY 26
ALLIANCE MUNI (AIA)

APP CRS	Rwy Ldg	6190
262°	TDZE	3927
	Apt Elev	3931

RNP APCH.

A

MISSED APPROACH: Climb to 6000 direct WAKPA and hold.

ASOS	DENVER CENTER	UNICOM
135.075	127.95 338.2	123.0 (CTAF) L

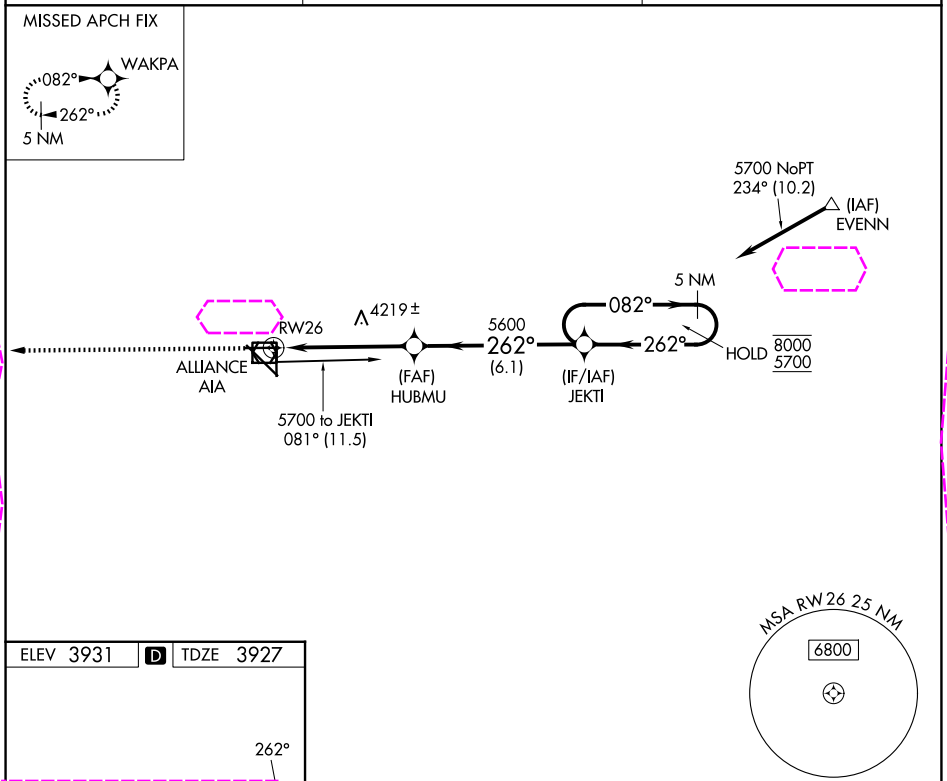

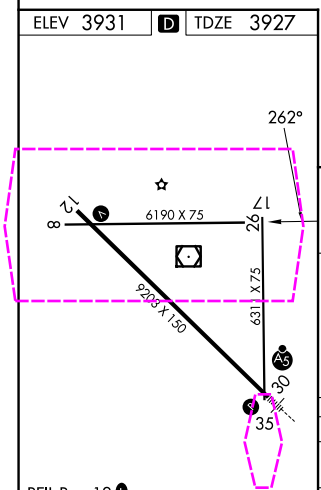

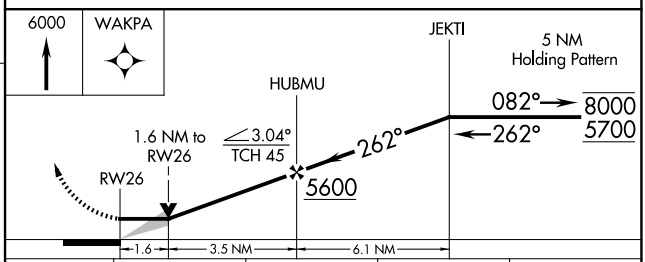

CATEGORY	A	B	C	D
LNAV MDA	4480-1 553 (600-1)		4480-1⅝ 553 (600-1⅝)	4480-1¾ 553 (600-1¾)
CIRCLING	4480-1 549 (600-1)	4520-1 589 (600-1)	4580-1¾ 649 (700-1¾)	4640-2¼ 709 (800-2¼)

NC-2, 07 AUG 2025 to 04 SEP 2025
NC-2, 07 AUG 2025 to 04 SEP 2025