(AEX3.AEX) 25135
ALEXANDRIA THREE DEPARTURE
AL-5573 (FAA)
CONROE/NORTH HOUSTON RGNL (CXO)
HOUSTON, TEXAS

ATIS
118.325
CLNC DEL
120.45
CLNC DEL
119.55 (when twr closed)
GND CON
120.45
CONROE TOWER ★
124.125 (CTAF)
HOUSTON DEP CON
119.7 281.4

TOP ALTITUDE: ASSIGNED BY ATC

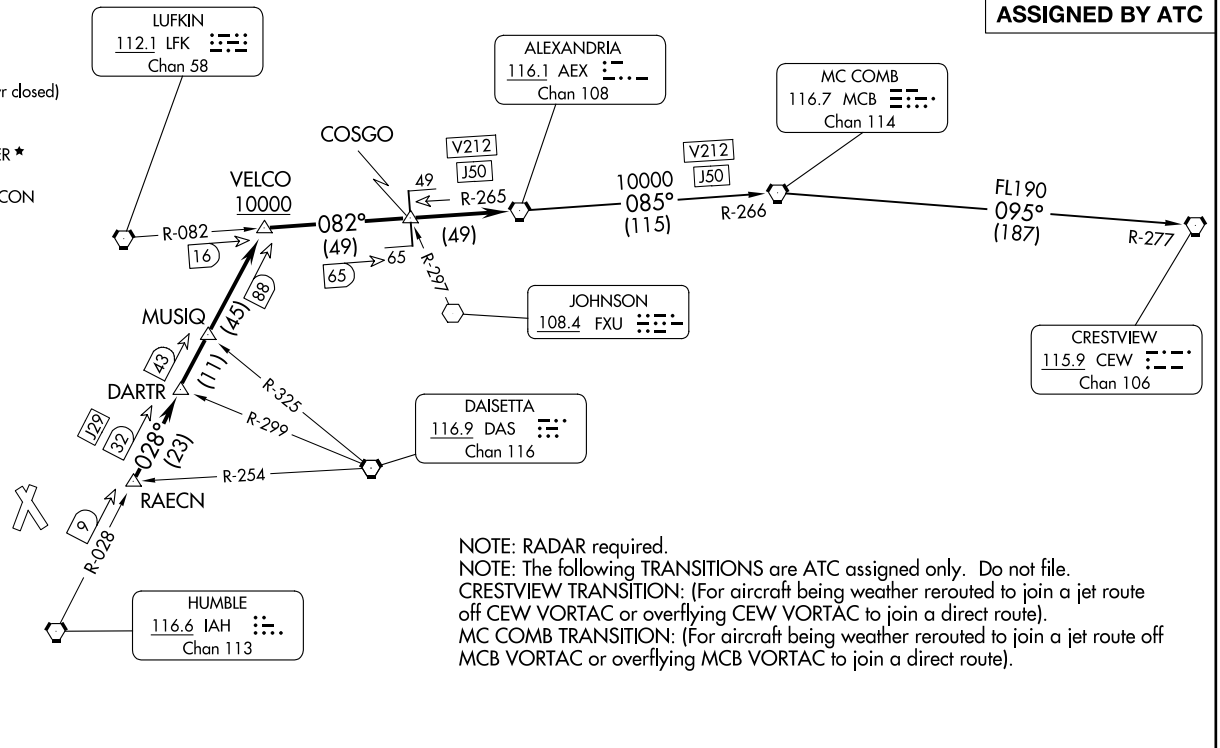

NOTE: RADAR required.
NOTE: The following TRANSITIONS are ATC assigned only. Do not file.
CRESTVIEW TRANSITION: (For aircraft being weather rerouted to join a jet route off CEW VORTAC or overflying CEW VORTAC to join a direct route).
MC COMB TRANSITION: (For aircraft being weather rerouted to join a jet route off MCB VORTAC or overflying MCB VORTAC to join a direct route).

TAKEOFF MINIMUMS
Rwys 1, 14, 19, 32: Standard.

NOTE: Chart not to scale.

(CONTINUED ON FOLLOWING PAGE)

ALEXANDRIA THREE DEPARTURE
(AEX3.AEX) 07OCT21
CONROE/NORTH HOUSTON RGNL (CXO)
HOUSTON, TEXAS