VALDOSTA, GEORGIA

RNAV (GPS) RWY 18L

MOODY AFB (KVAD)

APCH CRS	Rwy ldg	9300
183°	TDZE	233
	Arpt Elev	233

AL-435 (USAF)

* When ALS inop, increase CAT AB RVR to 55 and vis to 1 mile, CAT CDE vis to 1 3/8 miles.

ALSF-1

MISSED APPROACH: Climb to 3000 direct EQUIP and hold.

ATIS★	VALDOSTA APP CON	TOWER★	GND CON	CLNC DEL
273.5	126.6 285.6	128.45 (CTAF) 257.625	138.95 275.8	120.625 296.7

368

DME/DME RNP-0.3 NA

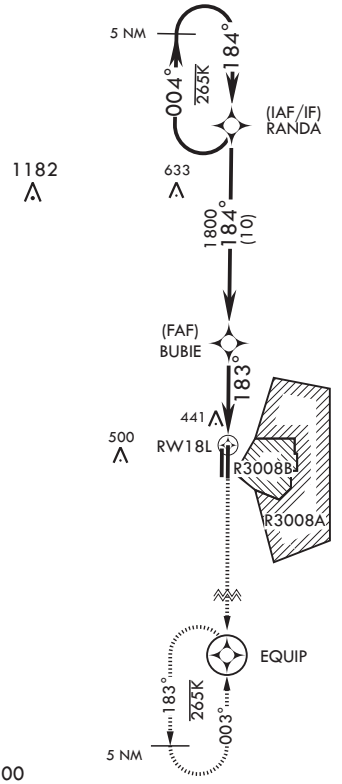

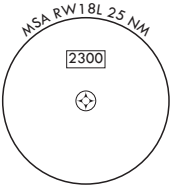

EMERG SAFE ALT 100 NM 3300

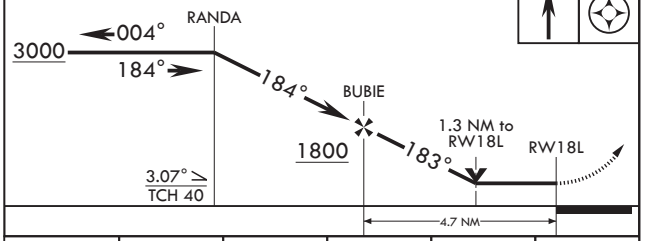

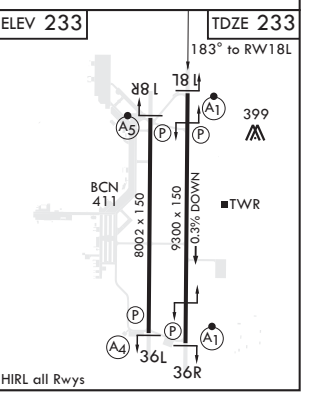

CATEGORY	A	B	C	D	E
LNAV MDA*	700/24 467 (500-½)		700/50 467 (500-1)		
C CIRCLING	760-1 527 (600-1)		760-1½ 527 (600-1½)	800-2 567 (600-2)	1060-3 827 (900-3)