MOUNTAIN HOME, IDAHO

HI-TACAN Y RWY 12

TACAN MUO Chan 87	APCH CRS 129°	Rwy ldg 13,510 TDZE 2987 Arpt Elev 2996

JAL-323 [USAF]

MOUNTAIN HOME AFB (KMUO)

* When ALS inop, increase CAT CDE vis to 1⅜ miles.
** Circling NA NE of Rwy 12-30.

ALSF-1

MISSED APPROACH: Climb to 10,000 via MUO R-124 to JUNEK/6 DME, turn right and intercept MUO R-229 to MSTNG/12 DME and hold. Continue climb in hold to 10,000.

ATIS	MOUNTAIN HOME APP CON	MOUNTAIN HOME TOWER	GND CON	CLNC DEL
273.5	124.8 259.1	133.85 253.5	120.5 275.8	127.1 290.425

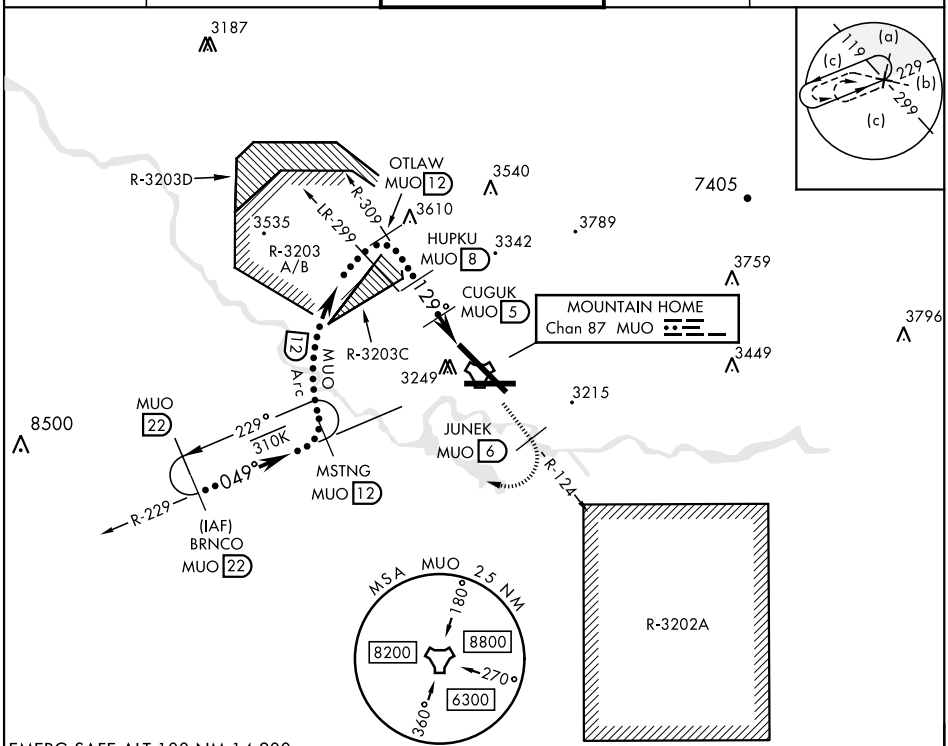

EMERG SAFE ALT 100 NM 14,200

VGSI and descent angles not coincident (VGSI Angle 2.50/TCH 41).

10,000 MUO R-124	JUNEK MUO 6	MSTNG MUO R-229 12

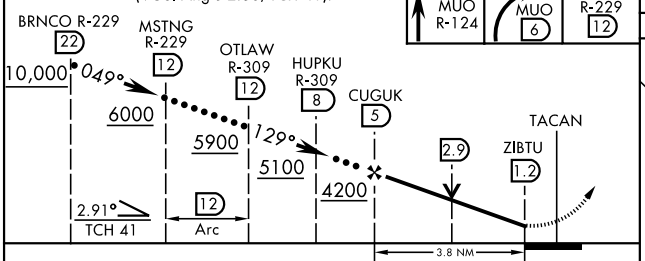

ELEV 2996	TDZE 2987

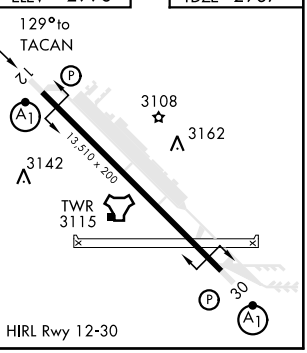

HIRL Rwy 12-30

CATEGORY	C	D	E
S-12 *	3480/50 493 (500-1)		
C CIRCLING **	3560-1½ 564 (600-1½)	3560-2 564 (600-2)	3700-2½ 704 (800-2½)

NW-1, 17 JUN 2021 to 15 JUL 2021