PINIE FOUR DEPARTURE (PINIE4•PINIE)

ATIS ★ 132.125 270.1
CLNC DEL
126.1 275.8
GND CON
126.1 275.8
SHAW TOWER ★
126.65 254.25
SHAW DEP CON
125.4 318.1
JACKSONVILLE CENTER
124.7 298.9

SHL-409 [USAF]

RWY 22L, Radio-tower 5137′ from DER, 1701′ left of centerline, 140′ AGL/369′ MSL.
RWY 22L, F16 tail 46′ from DER, 224′ right of centerline, 16′ AGL/249′ MSL.
RWY 22L, Terrain 0′ inward of DER, 500′ right of centerline, 236′ MSL.
RWY 22L, GS-rwy 04L 563′ from DER, 500′ right of centerline, 40′ AGL/273′ MSL.

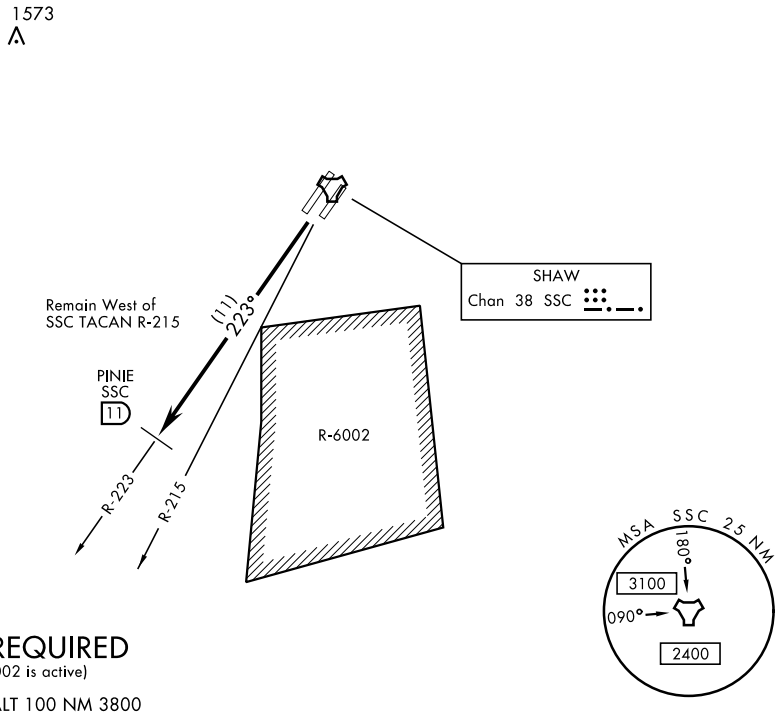

RADAR REQUIRED
(When R-6002 is active)

EMERG SAFE ALT 100 NM 3800

DEPARTURE ROUTE DESCRIPTION

TAKE-OFF RWY 22L/R: Climbing to 2000, intercept SSC TACAN R-223 until SSC 11 DME, then as directed by ATC.