RAPID CITY, SOUTH DAKOTA

# TACAN Y RWY 31

ELLSWORTH AFB (KRCA)

| TACAN RCA Chan 25 | APCH CRS 302° | Rwy ldg 13,497 TDZE 3192 Arpt Elev 3276 | AL-343 [USAF] |
|---|---|---|---|

* When ALS inop, increase CAT AB RVR to 55 and vis to 1 mile, increase CAT CDE vis to 1¾ mile.
** CAT E circling restricted to 28th BW aircraft only; 28th BW aircraft will remain within Class D airspace.

ALSF-1

MISSED APPROACH: Track outbound RCA R-310 to 3 DME (APOGE), then turn right to join RCA R-043 to 15 DME (RUUSH) and hold. Maintain 6000.

| ATIS ★ | ELLSWORTH APP CON | ELLSWORTH TOWER ★ | GND CON |
|---|---|---|---|
| 120.625 269.9 | 119.5 259.1 | 126.05 253.5 | 121.8 275.8 |

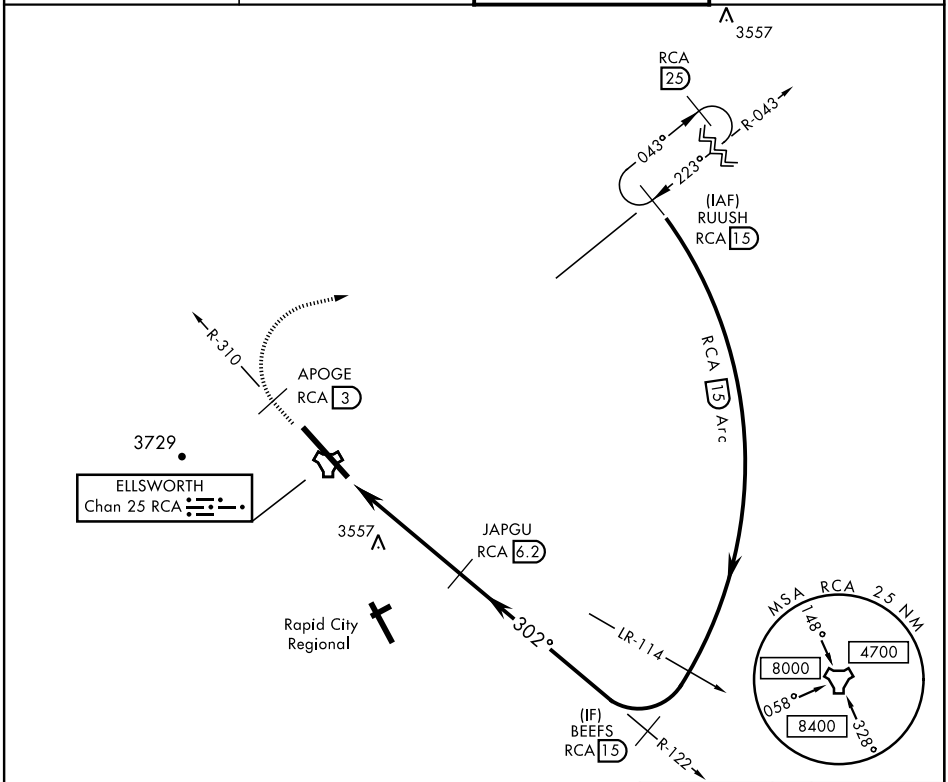


EMERG SAFE ALT 100 NM 9800

| ELEV 3276 | TDZE 3192 |
|---|---|

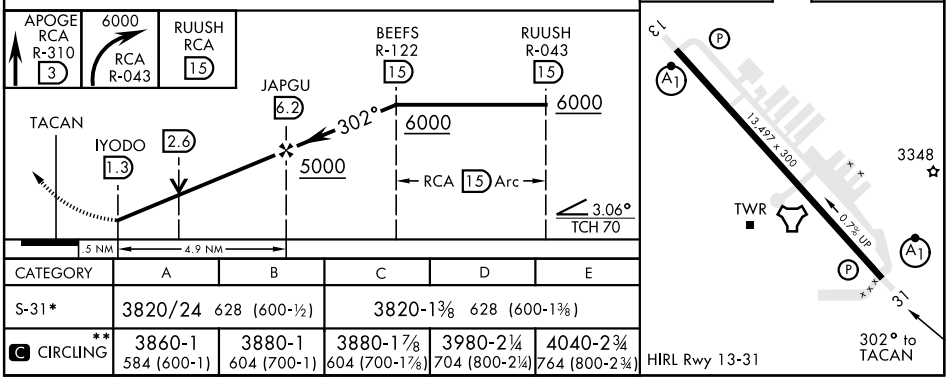


| CATEGORY | A | B | C | D | E |
|---|---|---|---|---|---|
| S-31* | 3820/24 628 (600-½) | | 3820-1⅜ 628 (600-1⅜) | | |
| C CIRCLING ** | 3860-1 584 (600-1) | 3880-1 604 (700-1) | 3880-1⅞ 604 (700-1⅞) | 3980-2¼ 704 (800-2¼) | 4040-2¾ 764 (800-2¾) |



NC-1, 16 JUL 2020 to 13 AUG 2020
NC-1, 16 JUL 2020 to 13 AUG 2020