Flight Procedure Tracking Form	Action: AMENDMENT	Task Type: SID	Date Open: 11/02/2012	Task #: 2012110225890401001	Request #: 20121102258904
Procedure: SID INDY FIVE INDIANAPOLIS IN KIND		Airport ID: KIND	Airport: INDIANAPOLIS INTL		Reimbursable #:
City: INDIANAPOLIS	ST: IN	GPS #:		Estimated Chart Date: 03/07/2013	FICO #:
Fac ID:	Fac. Type:		Specialist: SHANE DOWNUM		

Procedure Review

	Rec'd	Rel'd	Full Name	Comments
Lead:				11/2/12 GN QUALITY NDS scanned 11/28 EH
QA:	11/2 EH			11/16/12 GN 11/20 11/28 CHECKED
Liaison:				

Procedure Comments: ENROUTE

Remark Type: INFORMATION

Priority none

ATTACHED FORMS: 8260-15B
AMENDMENT TO REMOVE ALL AIRPORTS EXCLUDING INDIANAPOLIS INTL
CONTACT: JILL OLSON/STEVEN BARNETT 954-0414/9307

CANCELS FDC 2/5143, 2/5149, 2/5148, 2/5147, 2/5156, 2/5154

FC not required

Coding not required.

~~DEC 06 2012~~

DEC 06 2012

INDY FIVE DEPARTURE

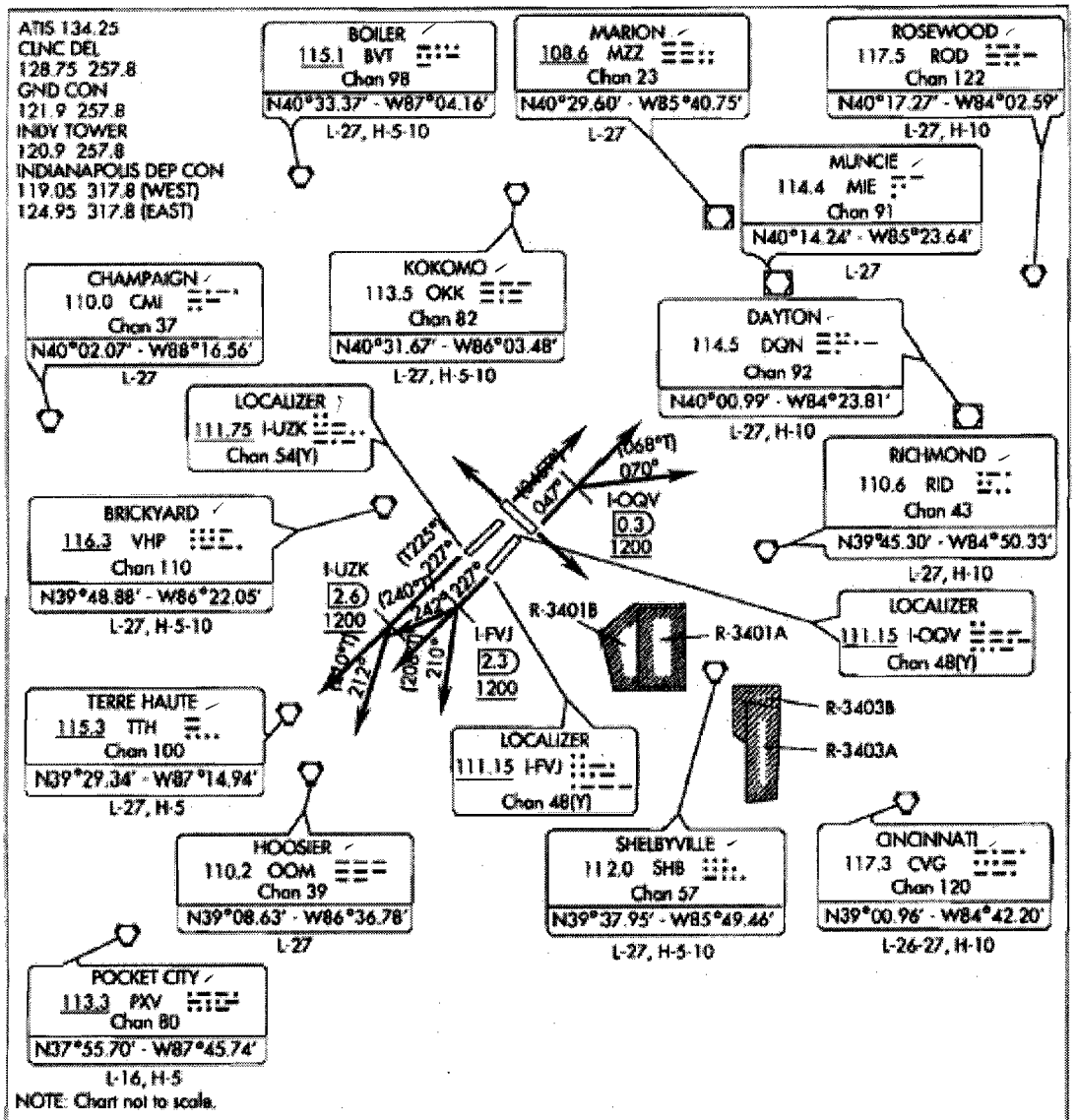

TAKE-OFF MINIMUMS:
Indianapolis Intl: Rwy 5L, 5R, 14, 23L, 23R, 32 Standard.

NOTE: RADAR Required.
NOTE: Select appropriate localizer/DME frequency/channel prior to departure.
NOTE: Turbojets accelerate to 250 kias until reaching 100000, if unable advise ATC.

(NARRATIVE ON THE FOLLOWING PAGE)

DEPARTURE ROUTE DESCRIPTION

TAKE-OFF RWY 23R (TURBOJETS ONLY-DME REQUIRED): Climb on heading 227° to I-UZK 2.6 DME, then on assigned heading 227° or 212°. Maintain 5000. Thence . . . .
TAKE-OFF RWY 23L (TURBOJETS ONLY-DME REQUIRED): Climb on heading 227° to I-FVJ 2.3 DME, then on assigned heading 210°, 227°, or 242°. Maintain 5000. Thence . . . .
TAKE-OFF RWY 5R (TURBOJETS ONLY-DME REQUIRED): Climb on heading 047° to I-OQV 0.3 DME, then on assigned heading 047° or 070°. Maintain 5000. Thence . . . .
TAKE-OFF ALL OTHER RWYS (TURBOJETS ONLY): Climb on assigned heading Maintain 5000. Thence . . .
TAKE-OFF ALL RWYS (PROPELLER ONLY): Climb on assigned heading. Maintain 3000. Thence . . . .
~~DEPARTING EAGLE CREEK AIRPARK: TAKEOFF RWY 3: Climb heading 030° to 2100 before turning right. Then on assigned heading to assigned altitude. Thence . . . .~~
~~DEPARTING GREENWOOD MUNI: TAKEOFF RWY 1: Climb heading 010° to 1500 before turning right. Then on assigned heading to assigned altitude. Thence . . . .~~
~~DEPARTING INDIANAPOLIS METROPOLITAN: TAKEOFF RWY 33: Climb heading 329° to 1400 before turning left. Then on assigned heading to assigned altitude. Thence . . . .~~
~~DEPARTING INDIANAPOLIS RGNL: TAKEOFF 25: Climb on heading 270° to 2000 before turning left. Then on assigned heading to assigned altitude. Thence . . . .~~
~~DEPARTING ALL OTHER AUTHORIZED RUNWAYS/AIRPORTS: Climb on assigned heading to assigned altitude. Thence . . . .~~

. . . . Expect radar vectors to assigned route/fix. Expect clearance to requested altitude ten minutes after departure.

TAKEOFF OBSTACLES

NOTE: Rwy 05L: Rod on OL microwave Tower 5052' from DER, 140' right of centerline, 129' AGL/923' MSL. Tower 5073' from DER, 93' right of centerline, 128' AGL/923' MSL.

NOTE: Rwy 05R: Tower 3756' from DER, 1048' left of centerline, 111' AGL/901' MSL. Rod on OL dome 3765' from DER, 1076' left of centerline, 107' AGL/901' MSL.

NOTE: Rwy 23R: Tree 3295' from DER, 948' right of centerline, 78' AGL/822' MSL. Tree 5159' from DER, 1144' right of centerline, 101' AGL/870' MSL.

NOTE: Rwy 32: Antenna 2370' from DER, 755' right of centerline, 70' AGL/849' MSL. Tree 2244' from DER, 707' right of centerline, 66' AGL/845' MSL.

PROTOTYPE-NOT FOR NAVIGATION

U.S. DEPARTMENT of TRANSPORTATION – FEDERAL AVIATION ADMINISTRATION

GRAPHIC DEPARTURE PROCEDURE (DP)

Bearings, headings, courses, tracks, and radials are magnetic. Elevation and altitudes are in feet MSL. Altitudes are minimum altitudes unless otherwise indicated. Ceilings are in feet above airport elevation. Distances are in nautical miles. Visibilities are in statue miles or feet RVR unless otherwise indicated. Graphic depictions attached.

DP Name	Number	DP Computer Code	Superseded Number	Dated	Effective Date
INDY	FIVE	INDY5.VHP	FOUR	09/20/2012	

TYPE: SID

DP ROUTE DESCRIPTION:

DEPARTING INDIANAPOLIS INTL.

TAKE-OFF RWY 23R (TURBOJETS ONLY-DME REQUIRED): CLIMB ON HEADING 226.56 TO I-UZK 2.6 DME, THEN ON ASSIGNED HEADING 227 OR 212. MAINTAIN 5000. THENCE ...

TAKE-OFF RWY 23L (TURBOJETS ONLY-DME REQUIRED): CLIMB ON HEADING 226.57 TO I-FVJ 2.3 DME, THEN ON ASSIGNED HEADING 210, 227, OR 242. MAINTAIN 5000. THENCE ...

TAKE-OFF RWY 5R (TURBOJETS ONLY-DME REQUIRED): CLIMB ON HEADING 046.55 TO I-OQV 0.3 DME, THEN ON ASSIGNED HEADING 047 OR 070. MAINTAIN 5000. THENCE ..

TAKE-OFF ALL OTHER RWYS (TURBOJETS ONLY): CLIMB ON ASSIGNED HEADING. MAINTAIN 5000. THENCE ...

TAKE-OFF ALL RWYS (PROPELLER ONLY): CLIMB ON ASSIGNED HEADING. MAINTAIN 3000. THENCE...

...EXPECT RADAR VECTORS TO ASSIGNED ROUTE/FIX. EXPECT CLEARANCE TO REQUESTED ALTITUDE TEN MINUTES AFTER DEPARTURE.

TRANSITION ROUTES (GRAPHIC DEPICTION ONLY):

Transition Name	Transition Computer Codes	From FIX/NAVAID	To FIX/NAVAID	Course	Distance	MEA	MOCA	Crossing Altitudes/Fixes

PROCEDURAL DATA NOTES/TAKEOFF MINIMUMS:

NOTE: RADAR REQUIRED

NOTE: SELECT APPROPRIATE LOCALIZER/DME FREQUENCY/CHANNEL PRIOR TO DEPARTURE.

NOTE: TURBOJETS ACCELERATE TO 250 KIAS UNTIL REACHING 10000. IF UNABLE ADVISE ATC.

TAKEOFF MINIMUMS:

INDIANAPOLIS INTL: RWY 5L, 5R, 14, 23L, 23R, 32 STANDARD.

TAKEOFF OBSTACLES NOTES:

QUALITY 3 CHECKED

INDIANAPOLIS INTL:
NOTE: RWY 5L, ROD ON OL MICROWAVE TOWER 5052 FT FROM DER, 140 FT RIGHT OF CENTERLINE, 129 FT AGL/923 FT MSL. TOWER 5073 FT FROM DER, 93 FT RIGHT OF CENTERLINE, 128 FT AGL/923 FT MSL.
NOTE: RWY 5R, TOWER 3756 FT FROM DER, 1048 FT LEFT OF CENTERLINE, 111 FT AGL/901 FT MSL. ROD ON OL DOME 3765 FT FROM DER, 1076 FT LEFT OF CENTERLINE, 107

Bearings, headings, courses, tracks, and radials are magnetic. Elevation and altitudes are in feet MSL. Altitudes are minimum altitudes unless otherwise indicated. Ceilings are in feet above airport elevation. Distances are in nautical miles. Visibilities are in statue miles or feet RVR unless otherwise indicated. Graphic depictions attached.

DP Name	Number	DP Computer Code	Superseded Number	Dated	Effective Date
INDY	FIVE	INDY5.VHP	FOUR	09/20/2012	

FT AGL/901 FT MSL.
NOTE: RWY 23R, TREE 3295 FT FROM DER, 948 FT RIGHT OF CENTERLINE, 78 FT AGL/822 FT MSL. TREE 5159 FT FROM DER, 1144 FT RIGHT OF CENTERLINE, 101 FT AGL/870 FT MSL.
NOTE: RWY 32, ANTENNA 2370 FT FROM DER, 755 FT RIGHT OF CENTERLINE, 70 FT AGL/849 FT MSL. TREE 2244 FT FROM DER, 707 FT RIGHT OF CENTERLINE, 66 FT AGL/845 FT MSL.

CONTROLLING OBSTACLES:

LOST COMMUNICATIONS PROCEDURES:

ADDITIONAL FLIGHT DATA:

CHART R-3401A AND R-3401B, R-3403A AND R-3403B.
CHART: ALL INDIANAPOLIS INTL RWYS.

AIRPORTS SERVED:

INDIANAPOLIS INTL	INDIANAPOLIS, IN

COMMUNICATIONS:

ATIS, INDIANAPOLIS CLEARANCE DELIVERY, INDIANAPOLIS GROUND CONTROL, INDIANAPOLIS TOWER, INDIANAPOLIS DEPARTURE CONTROL.

FIXES AND/OR NAVAIDS:

BOILER (BVT) VORTAC, BRICKYARD (VHP) VORTAC, CHAMPAIGN (CMI) VORTAC, CINCINNATI (CVG) VORTAC, DAYTON (DQN) VOR/DME, HOOSIER (OOM) VORTAC, KOKOMO (OKK) VORTAC, MARION (MZZ) VOR/DME, MUNCIE (MIE) VOR/DME, POCKET CITY (PXV) VORTAC, RICHMOND (RID) VORTAC, ROSEWOOD (ROD) VORTAC, SHELBYVILLE (SHB) VORTAC, TERRE HAUTE (TTH) VORTAC.

QUALITY CHECKED 3

U.S. DEPARTMENT of TRANSPORTATION – FEDERAL AVIATION ADMINISTRATION

GRAPHIC DEPARTURE PROCEDURE (DP)

Bearings, headings, courses, tracks, and radials are magnetic. Elevation and altitudes are in feet MSL. Altitudes are minimum altitudes unless otherwise indicated. Ceilings are in feet above airport elevation. Distances are in nautical miles. Visibilities are in statue miles or feet RVR unless otherwise indicated. Graphic depictions attached.

DP Name	Number	DP Computer Code	Superseded Number	Dated	Effective Date
INDY	FIVE	INDY5.VHP	FOUR	09/20/2012	

REMARKS:

FLIGHT INSPECTED BY:

CHRISTOPHER LENCKUS 5/30/12

REQUIRED EFFECTIVE DATE:

ROUTINE

DEVELOPED BY:

JILL OLSON (SHANE DOWNUM) AJV-353 10/31/2012

APPROVED BY:

LARRY STROUT AJV-353

COORDINATED WITH:

ALPA, AOPA, APA, ATA, NBAA, ZID, IND ATCT, IND APP CON, AMGR

CHANGES:

REMOVED ALL INFORMATION AND REFERENCES TO EAGLE CREEK AIRPARK, INDIANAPOLIS EXECUTIVE, SHELBYVILLE MUNI, GREENWOOD MUNI, INDIANAPOLIS METROPOLITAN, INDIANAPOLIS RGNL.

REASONS:

SID ONLY APPLIES TO INDIANAPOLIS INTL

QUALITY 3 CHECKED