Flight Procedure Tracking Form	Action: FLIGHT CHECK	Task Type: IAP	Date Open: 09/27/2012	Task #: 2012092725695501002	Request #: 20120927256955
Procedure: RNAV (GPS) RWY 36 ORIG		Airport ID: KRCP	Airport: ROOKS COUNTY		Reimbursable #:
City: STOCKTON	ST: KS	GPS #:		Estimated Chart Date: 05/02/2013	FICO #:
Fac ID:	Fac. Type: LPV	Specialist: JOHN ROSARIO			

Procedure Review

	Rec'd	Rel'd	Full Name	Comments
Lead:	11/08/2012	01/23/2013	CASIMIR TABAKA	
QA:	01/23/2013	01/23/2013	CASIMIR TABAKA	
Liaison:	01/23/2013		Spurlin	

Procedure Comments: ENROUTE-NON **Remark Type:** INFORMATION

pg 2 of 4

STOCKTON, KS ROOKS COUNTY (KRCP) RNAV (GPS) RWY 36, ORIG (LPV) ENROUTE-NO FC: 3.19.13 PUB: 5.2.13

ATTACHED FORMS: 8260-3; 8260-10; 8260-9; 8260-2(S): UTUVE, ORIG; WAJHU, ORIG; ZAVOV, ORIG; ZOMOR, ORIG.

CONTACT: JILL OLSON/STEVE BARNETT -AVJ-353 LEADS, 405.954.4014 / 405.954.9307.

WAAS CH 40232 W36A	APP CRS 356°	Rwy ldg 5000 THRE 1999 Apt Elev 1999

RNAV (GPS) RWY 36
STOCKTON/ROOKS COUNTY (RCP)

⚠ NA	Baro-VNAV NA. Use Hill City altimeter setting; when not received, use Hays altimeter setting. Circling NA west of Rwy 18-36. DME/DME RNP-0.3 NA Circling to RWY 32 NA at night.	MISSED APPROACH: Climb to 6000 direct ZAVOV and hold, continue climb-in-hold to 6000.

AWOS-3	KANSAS CITY CENTER	CTAF
120.075	XXX.X	122.9

PROTOTYPE: NOT FOR NAVIGATION

UTUVE: N 3910.157 / W 09918.563
WAJHU: N 3918.283 / W 09918.346
ZAVOV: N 3931.434 / W 09917.994
ZOMOR: 3915.479 / W 09918.421
RW36: N 3920.384 / W 09918.290

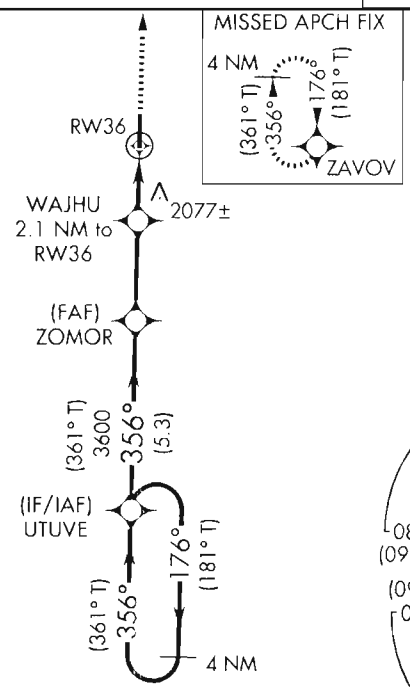

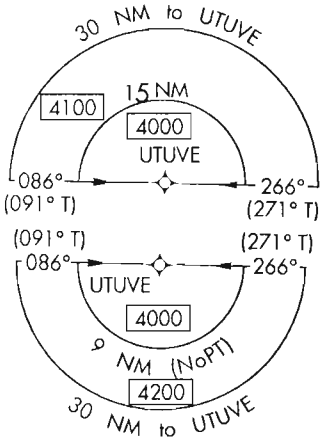

3189

ELEV 1999	D	THRE 1999

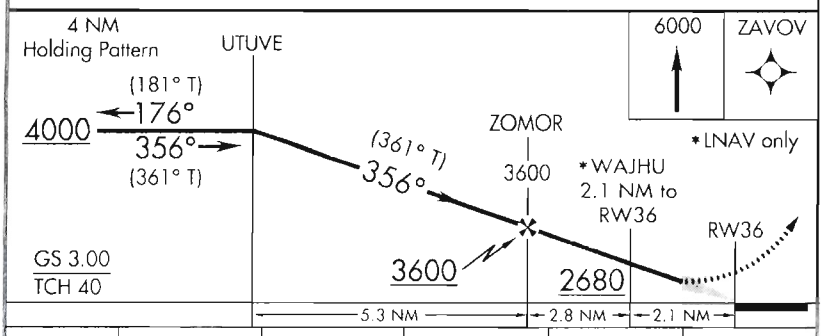

CATEGORY	A	B	C	D	E
LPV DA	2290-1 291 (300-1)			NA	
LNAV/VNAV DA	2340-1⅛ 341 (400-1⅛)			NA	
LNAV MDA	2420-1 421 (400-1)		2420-1¼ 421 (400-1¼)	NA	
CIRCLING	2460-1 461 (500-1)	2480-1 481 (500-1)	2500-1½ 501 (600-1½)	NA	

356° to RW36

MIRL Rwy 18-36 L
REIL Rwys 18 and 36

US DEPARTMENT OF TRANSPORTATION
FEDERAL AVIATION ADMINISTRATION

RNAV - STANDARD INSTRUMENT APPROACH PROCEDURE TITLE 14 CFR PART 97.33

Bearings, headings, courses, and radials are magnetic. Elevations and altitudes are in feet, MSL, except HAT, HAA, TCH, and RA. Altitudes are minimum altitudes unless otherwise indicated. Ceilings are in feet above airport elevation. Distances are in nautical miles unless otherwise indicated, except visibilities which are in statute miles or in feet RVR.

TERMINAL ROUTES

FROM	TO	COURSE AND DISTANCE	ALTITUDE
UTUVE (IF/IAF)	ZOMOR (FB)	356.19 / 5.32	3600
ZOMOR (FAF)	WAJHU/2.10 NM TO RW36 (FB)	356.19 / 2.80	2680
WAJHU/2.10 NM TO RW36	RW36 (MAP) (FO)	356.19 / 2.10	
RW36 (MAP)	2290 MSL	356.19	
2290 MSL	ZAVOV (FO)		6000

MISSED APPROACH

LPV: DA
LNAV/VNAV: DA
LNAV: RW36

CLIMB TO 6000 DIRECT ZAVOV AND HOLD, CONTINUE CLIMB-IN-HOLD TO 6000.

ADDITIONAL FLIGHT DATA:
HOLD N, RT, 176.19 INBOUND.
CHART FAS OBST: 2077 TRMSN TWR 391854N/0991733W
CHART HILL CITY ASOS
DISTANCE TO THLD FROM 291 HATH: 0.79 NM.
WAAS CHANNEL # 40232
REFERENCE PATH ID: W36A
CHART CIRCLING ICON
LTP HAE: 583.5 M

1. PT ____ SIDE OF COURSE ____ OUTBOUND ____ FT WITHIN ____ MILES OF ____ (IAF)
2. HOLD S UTUVE, RT, 356.19 INBOUND, 4000 FT. IN LIEU OF PT (IAF)
3. FAC: 356.19 FAF: ZOMOR DIST FAF TO MAP: 4.90 THLD: 4.90
4. MIN. ALT: UTUVE 4000, ZOMOR 3600, WAJHU/2.10 NM TO RW36 2680*
5. DIST TO THLD FROM OM: ____ MM: ____ IM: ____ 150 HAT: ____ 100 HAT: ____ GS ANT: ____
6. MIN GS INCPT: 3600 GS ALT AT: ZOMOR 3600 OM: ____ MM: ____ IM: ____
7. GS ANGLE: 3.00 TCH: 40.0 34:1 IS CLEAR
8. MSA FROM:

MAG VAR: 5E EPOCH YEAR: 2010

MINIMUMS

TAKEOFF: SEE FAA FORM 8260-15A FOR THIS AIRPORT ALTERNATE: N A X

CATEGORY =====>	A			B			C			D			E		
	DH/MDA	VIS	HAT/HAA	DH/MDA	VIS	HAT/HAA	DH/MDA	VIS	HAT/HAA	DH/MDA	VIS	HAT/HAA	DH/MDA	VIS	HAT/HAA
LPV DA	2290	1	291	2290	1	291	2290	1	291		NA				
LNAV/VNAV DA	2340	1 1/8	341	2340	1 1/8	341	2340	1 1/8	341		NA				
LNAV MDA	2420	1	421	2420	1	421	2420	1 1/4	421		NA				
CIRCLING	2460	1	461	2480	1	481	2500	1 1/2	501		NA				

NOTES:
CHART NOTE: BARO-VNAV NA.
CHART NOTE: USE HILL CITY ALTIMETER SETTING; WHEN NOT RECEIVED, USE HAYS ALTIMETER SETTING.
CHART NOTE: CIRCLING NA WEST OF RWY 18-36.
CHART NOTE: DME/DME RNP-0.3 NA.
(SEE FORM 8260-10)

CITY AND STATE	ELEVATION: 1999 THRE: 1999 AIRPORT NAME:	FACILITY IDENTIFIER:	PROCEDURE NO./AMDT NO./EFFECTIVE DATE:	SUP:
STOCKTON, KS	ROOKS COUNTY	RNAV	RNAV (GPS) RWY 36, ORIG	AMDT: NONE
				DATED

QUALITY CHECKED

ALL AFFECTED PROCEDURES REVIEWED?	COORDINATES OF FACILITIES	REQUIRED EFFECTIVE DATE
[X] YES [ ] NO		**ROUTINE**

COORDINATED WITH:

ATA	AAT	ALPA	APA	AOPA	NBAA	OTHER (specify)
[ ]	[ ]	[X]	[ ]	[X]	[X]	[X] **AIRPORT MANAGER, ZDV, ZKC**

FLIGHT CHECKED BY		
NAME:	FIFO	DATE:
DEVELOPED BY		
NAME: **JOHN R. ROSARIO**	FIFO **AJV-353**	DATE: **11/29/2012**
APPROVED BY		
NAME: **LARRY H STROUT** **MANAGER**	FIFO **AJV-353**	DATE:

CHANGES:

ORIGINAL PROCEDURE

REASONS:

FPT REQUEST

EFFECTIVE CONCURRENT WITH: AIRSPACE DOCKET _____

THIS IS A PDF EDITED FORM
TERMINAL ROUTES: ADDED (FAF) AND 6000

Bearings, headings, courses, and radials are magnetic. Elevations and altitudes are in feet, MSL, except HAT, HAA, TCH, and RA. Altitudes are minimum altitudes unless otherwise indicated. Ceilings are in feet above aiport elevation. Distances are in nautical miles unless otherwise indicated, except visibilities which are in statute miles or in feet RVR.

NOTES, (CONT.):
CHART NOTE: CIRCLING TO RWY 32 NA AT NIGHT.
*LNAV ONLY

TAA

	FROM	TO	ALT
1.	266/30 CW 086/30	266/9 CW 086/9	4200
	266/9 CW 086/9 (NOPT)	UTUVE (IF/IAF) (FB)	4000
2.	086/30 CW 266/30	086/15 CW 266/15	4100
	086/15 CW 266/15	UTUVE (IAF) (FO)	4000

CITY AND STATE	ELEVATION: 1999 THRE: 1999	FACILITY IDENTIFIER:	PROCEDURE NO./ AMDT NO./EFFECTIVE DATE:	SUP:
STOCKTON, KS	AIRPORT NAME: ROOKS COUNTY	RNAV	RNAV (GPS) RWY 36, ORIG	AMDT: NONE
				DATED:

QUALITY CHECKED

ALL AFFECTED PROCEDURES REVIEWED?	COORDINATES OF FACILITIES	REQUIRED EFFECTIVE DATE
☐ YES ☐ NO		

COORDINATED WITH:

ATA	AAT	ALPA	APA	AOPA	NBAA	OTHER (specify)
☐	☐	☐	☐	☐	☐	☐ _____

FLIGHT CHECKED BY		
NAME:	FIFO	DATE:
DEVELOPED BY		
NAME:	FIFO	DATE:
APPROVED BY		
NAME:	FIFO	DATE:

CHANGES:

REASONS:

Bearings, headings, courses, and radials are magnetic. Elevations and altitudes are in feet, MSL, except HAT, HAA, TCH, and RA. Altitudes are minimum altitudes unless otherwise indicated. Ceilings are in feet above aiport elevation. Distances are in nautical miles unless otherwise indicated, except visibilities which are in statute miles or in feet RVR.

FAS DATA BLOCK INFORMATION

DATA FIELD	DATA
OPERATION TYPE	0
SBAS SERVICE PROVIDER IDENTIFIER	0
AIRPORT IDENTIFIER	KRCP
RUNWAY	RW36
APPROACH PERFORMANCE DESIGNATOR	0
ROUTE INDICATOR	
REFERENCE PATH DATA SELECTOR	0
REFERENCE PATH IDENTIFIER (APPROACH ID)	W36A
LTP/FTP LATITUDE	392023.0265N
LTP/FTP LONGITUDE	0991817.4040W
LTP/FTP ELLIPSOIDAL HEIGHT	+05835
FPAP LATITUDE	392152.1900N
FPAP LONGITUDE	0991815.0100W
THRESHOLD CROSSING HEIGHT (TCH)	00040.0
TCH UNITS SELECTOR (METERS OR FEET USED)	F
GLIDEPATH ANGLE (GPA)	03.00
COURSE WIDTH AT THRESHOLD	106.75
LENGTH OFFSET	1224
HORIZONTAL ALERT LIMIT (HAL)	40.0
VERTICAL ALERT LIMIT (VAL)	50.0
CRC REMAINDER	0BE5878B

ADDITIONAL PATH POINT RECORD INFORMATION

ICAO CODE	K3
LTP ORTHOMETRIC HEIGHT	+06093
FPAP ORTHOMETRIC HEIGHT	+06093

CITY AND STATE	ELEVATION: 1999 THRE: 1999	FACILITY IDENTIFIER:	PROCEDURE NO./ AMDT NO./EFFECTIVE DATE:	SUP:
STOCKTON, KS	AIRPORT NAME: ROOKS COUNTY	RNAV	RNAV (GPS) RWY 36, ORIG	AMDT: NONE
				DATED:

QUALITY CHECKED

ALL AFFECTED PROCEDURES REVIEWED?	COORDINATES OF FACILITIES	REQUIRED EFFECTIVE DATE
☐ YES ☐ NO		

COORDINATED WITH:

ATA ☐ AAT ☐ ALPA ☐ APA ☐ AOPA ☐ NBAA ☐ OTHER (specify) ☐ _____

FLIGHT CHECKED BY		
NAME:	FIFO	DATE:
DEVELOPED BY		
NAME:	FIFO	DATE:
APPROVED BY		
NAME:	FIFO	DATE:

CHANGES:

REASONS:

U.S. DEPARTMENT OF TRANSPORTATION - FEDERAL AVIATION ADMINISTRATION

RNAV (GPS) STANDARD INSTRUMENT APPROACH PROCEDURE

FLIGHT STANDARDS SERVICES - **FAR PART 97.33**

Bearings, headings, courses, and radials are magnetic. Elevations and altitudes are in feet, MSL, except HAT, HAA, TCH, and RA. Altitudes are minimum altitudes unless otherwise indicated. Ceilings are in feet above airport elevation. Distances are in nautical miles unless otherwise indicated, except visibilities which are in statute miles or in feet RVR.

ARINC PACKET - 424-18 - RNAV (GPS)

```
                 1         2         3         4         5         6         7         8         9         0         1         2         3
WP      123456789012345678901234567890123456789012345678901234567890123456789012345678901234567890123456789012345678901234567890123456789012
        ------------------------------------------------------------------------------------------------------------------------------------
        SUSAEAENRT   UTUVE K30    W     N39100939W099183378                      E0053     NAR           UTUVE
        SUSAEAENRT   WAJHU K30    W     N39181695W099182077                      E0053     NAR           WAJHU
        SUSAEAENRT   ZAVOV K30    W     N39312605W099175962                      E0053     NAR           ZAVOV
        SUSAEAENRT   ZOMOR K30    W     N39152872W099182526                      E0053     NAR           ZOMOR

                 1         2         3         4         5         6         7         8         9         0         1         2         3
AIRPORT 123456789012345678901234567890123456789012345678901234567890123456789012345678901234567890123456789012345678901234567890123456789012
        ------------------------------------------------------------------------------------------------------------------------------------
        SUSAP KRCPK3ARCP     0     050YHN39204770W099181670E005001999         1800018000C    MNAR    ROOKS COUNTY

                 1         2         3         4         5         6         7         8         9         0         1         2         3
SEGMENT 123456789012345678901234567890123456789012345678901234567890123456789012345678901234567890123456789012345678901234567890123456789012
        ------------------------------------------------------------------------------------------------------------------------------------
        SUSAP KRCPK3FR36   AUTUVE 010UTUVEK3EA0EE AR   HF                     35620050    + 04000     18000                A JS
        SUSAP KRCPK3FR36   R      010UTUVEK3EA0E  I    IF                                 + 04000     18000                A JS
        SUSAP KRCPK3FR36   R      020ZOMORK3EA1E  F 051TF                     35620053    + 03600                          A JS
        SUSAP KRCPK3FR36   R      020ZOMORK3EA2WALPV       ALNAV/VNAV ALNAV                                                  JS
        SUSAP KRCPK3FR36   R      021WAJHUK3EA0E S  031TF                     35620028    V 0268002712        -300         A JS
        SUSAP KRCPK3FR36   R      030RW36 K3PG0GY M 031TF                     35620021      02039             -300         A JS
        SUSAP KRCPK3FR36   R      040         0  M     CA                     3562        + 02290                          A JS
        SUSAP KRCPK3FR36   R      050ZAVOVK3EA0EY      DF                                 + 06000                          A JS
        SUSAP KRCPK3FR36   R      060ZAVOVK3EA0EE  R   HM                     17620050    + 06000                          A JS

                 1         2         3         4         5         6         7         8         9         0         1         2         3
RUNWAY  123456789012345678901234567890123456789012345678901234567890123456789012345678901234567890123456789012345678901234567890123456789012
        ------------------------------------------------------------------------------------------------------------------------------------
        SUSAP KRCPK3GRW36    0050003562 N39202303W099181740+0000    +0583501999000040075R

                 1         2         3         4         5         6         7         8         9         0         1         2         3
PP      123456789012345678901234567890123456789012345678901234567890123456789012345678901234567890123456789012345678901234567890123456789012
        ------------------------------------------------------------------------------------------------------------------------------------
        SUSAP KRCPK3PR36   RW36 001 0000W36A0N3920230265W09918174040+058350300N3921521900W099181501001067512240004 00F4005000BE5878B
        SUSAP KRCPK3PR36   RW36 002E      +06093+06093LPV       40232
```

QUALITY CHECKED

CITY AND STATE	ELEVATION: 1999 THRE: 1999	FACILITY IDENTIFIER:	PROCEDURE NO. / AMDT NO. / EFFECTIVE DATE:	SUP:
STOCKTON, KS	AIRPORT NAME: **ROOKS COUNTY**	**RNAV**	**RNAV (GPS) RWY 36, ORIG**	AMDT: **NONE**
				DATED:

ALL AFFECTED PROCEDURES REVIEWED?	COORDINATES OF FACILITIES	REQUIRED EFFECTIVE DATE
☐ YES ☐ NO		

COORDINATED WITH:

ATA	AAT	ALPA	APA	AOPA	NBAA	OTHER (specify)
☐	☐	☐	☐	☐	☐	☐ _____

FLIGHT CHECKED BY		
NAME:	FIFO	DATE:
DEVELOPED BY		
NAME:	NFPG	DATE:
APPROVED BY		
NAME:	NFPG	DATE:

CHANGES:

REASONS:

U.S. DEPARTMENT OF TRANSPORTATION - FEDERAL AVIATION ADMINISTRATION

RNAV (GPS) STANDARD INSTRUMENT APPROACH PROCEDURE

FLIGHT STANDARDS SERVICES - **FAR PART 97.33**

Bearings, headings, courses, and radials are magnetic. Elevations and altitudes are in feet, MSL, except HAT, HAA, TCH, and RA. Altitudes are minimum altitudes unless otherwise indicated. Ceilings are in feet above airport elevation. Distances are in nautical miles unless otherwise indicated, except visibilities which are in statute miles or in feet RVR.

ARINC SUMMARY - 424-18 - RNAV (GPS)

ROUTES	TRANSITION	FIX	SEQ	USE	PATH	TURN	FO/FB	RNP	MAG(TRUE)	DISTANCE	ALTITUDE	SPEED
	UTUVE	UTUVE	010	IAF	HF	R	FO		356.2(001.2T)	005.0	AA 04000	
		UTUVE	010	FACF	IF		FB				AA 04000	
		ZOMOR	020	FAF	TF		FB	0.5	356.2(001.2T)	005.3	AA 03600	
		WAJHU	021	SDF	TF		FB	0.3	356.2(001.2T)	002.8	AA 02680 GS 02712	
		RW36	030	MAP	TF		FO	0.3	356.2(001.2T)	002.1	AT 02039	

MISSED APPROACH	FIX	SEQ	USE	PATH	TURN	FO/FB	RNP	MAG(TRUE)	DISTANCE	ALTITUDE	SPEED
		040		CA		FB		356.2(001.2T)		AA 02290	
	ZAVOV	050		DF		FO				AA 06000	
	ZAVOV	060		HM	R	FO		176.2(181.2T)	005.0	AA 06000	

POINT DATA	WAYPOINT	LAT IN SECS	LONG IN SECS	LAT IN MINS	LONG IN MINS
	UTUVE	N391009.39	W0991833.78	N3910.157	W09918.563
	WAJHU	N391816.95	W0991820.77	N3918.283	W09918.346
	ZAVOV	N393126.05	W0991759.62	N3931.434	W09917.994
	ZOMOR	N391528.72	W0991825.26	N3915.479	W09918.421
	RW36	N392023.03	W0991817.40	N3920.384	W09918.290

RUNWAY DATA	RWY	THRESHOLD ELEVATION	TCH
	RW36	01999	40

QUALITY CHECKED

CITY AND STATE	ELEVATION: 1999 THRE: 1999	FACILITY IDENTIFIER:	PROCEDURE NO. / AMDT NO. / EFFECTIVE DATE:	SUP:
STOCKTON, KS	AIRPORT NAME: ROOKS COUNTY	RNAV	RNAV (GPS) RWY 36, ORIG	AMDT: NONE
				DATED:

ALL AFFECTED PROCEDURES REVIEWED?	COORDINATES OF FACILITIES	REQUIRED EFFECTIVE DATE
☐ YES ☐ NO		

COORDINATED WITH:

ATA ☐ AAT ☐ ALPA ☐ APA ☐ AOPA ☐ NBAA ☐ OTHER (specify) ☐ _____

FLIGHT CHECKED BY		
NAME:	FIFO	DATE:
DEVELOPED BY		
NAME:	NFPG	DATE:
APPROVED BY		
NAME:	NFPG	DATE:

CHANGES:

REASONS:

STANDARD INSTRUMENT APPROACH PROCEDURE DATA RECORD

PART - A OBSTRUCTION DATA

1. APP SEGMENT	FROM	TO	OBSTRUCTION	COORDINATES	ELEV. MSL	ROC	ALT. ADJUSTMENTS	MIN. ALT.
STRAIGHT-IN AREA	266/30 CW 086/30	266/9 CW 086/9	1. TOWER (20-001632)	390115.00N/0992813.00W	3189 (2D)	1000		4200
			2. TERRAIN	390133.00N/0993406.00W	2313 (2300)		AS1500	3800
STRAIGHT-IN AREA	266/9 CW 086/9	UTUVE	3. TOWER (20-001743)	391318.00N/0991617.00W	2554 (2C)	1000	AT446	4000
			4. TERRAIN	391412.00N/0993948.00W	1455 (1500)		AS1500	3000
STRAIGHT-IN AREA	086/30 CW 266/30	086/15 CW 266/15	5. TOWER (20-001127)	391558.00N/0994949.00W	3035 (5D)	1000		4100
			6. TERRAIN	392316.64N/0994945.06W	2252 (2300)		AS1500	3800
STRAIGHT-IN AREA	086/15 CW 266/15	UTUVE	7. TOWER (20-020407)	391511.90N/0993411.50W	2604 (2C)	1000	AT396	4000
			8. TERRAIN	392430.00N/0991742.00W	1949 (1900)		AS1500	3400
INTERMEDIATE	UTUVE (IF/IAF)	ZOMOR	3. TOWER (20-001743)	391318.00N/0991617.00W	2554 (2C)	500	AT546	3600
			9. TERRAIN	391145.00N/0992000.00W	2182 (2200)		AS1000	3200
FINAL: LPV	ZOMOR	DA				ASC	RA91	2290/291
FINAL: LNAV/VNAV	ZOMOR	DA	10. THRESHOLD	392023.03N/0991817.40W	1999 (1A)	PDA	RA91	2340/341
FINAL: LNAV	ZOMOR	WAJHU/2.10 NM TO RW36	11. AAO	391612.00N/0991811.00W	2330 (2C)	250	RA91	2680
2. HOLD-IN-LIEU-OF-PT	UTUVE	P-5	3. TOWER (20-001743)	391318.00N/0991617.00W	2554 (2C)	1000	AT446	4000
			13. TERRAIN	390124.00N/0992003.00W	2209 (2200)		AS1500	3700
3. MISSED APPROACH — MAP:	DA / DA / RW36	ZAVOV				ASC		6000
			14. WIND MILL	392248.96N/0991943.63W	2372 (4D)	1000	AC50	3500
ELEV:	2085/2190/2229		15. TERRAIN	392046.47N/0991829.31W	2013 (2000)		AS1500	3500
			16. TREE (KRCPT0051)	391908.46N/0991827.94W	2067 (1A)	300	RA91	2460
			12. TWR (KRCPT0075)	391853.96N/0991732.80W	2077 (1A)	300	RA91	2480
			17. TWR (KRCPT0054)	391748.26N/0991732.79W	2103 (1A)	300	RA91	2500

4. CIRCLING AREA	DISTANCE	HT. ABV. ARPT. REQUIRED	HT. ABV. ARPT. ACTUAL
CATEGORY A	1.3 NM	350	461
CATEGORY B	1.5 NM	450	481
CATEGORY C	1.7 NM	450	501
CATEGORY D	2.3 NM	550	
CATEGORY E	4.5 NM	550	

5. MINIMUM SAFE ALTITUDES — PRIMARY NAVAID:

SECTOR	OBSTRUCTION	BRG/DIST	ELEVATION (MSL)	M S A	SECTOR	OBSTRUCTION	BRG/DIST	ELEVATION (MSL)	M S A

CITY AND STATE	ELEVATION: 1999 / AIRPORT NAME:	FACILITY	PROCEDURE AND AMENDMENT NO:	REGION
STOCKTON, KS	ROOKS COUNTY	RNAV	RNAV (GPS) RWY 36, ORIG	ACE

QUALITY CHECKED

FAA Form 8260 - 9 / April 2006 (Computer Generated)

PART B - SUPPLEMENTAL DATA

1. COMMUNICATIONS WITH:	2. WEATHER SERVICE		3. ALTIMETER SETTING
ZDV ARTCC	N W S	OTHER:	SOURCE: KHLC / KHYS
	F A A		DISTANCE: 24.60 / 30.27
SATISFACTORY ON:	A / C	ASOS / AWOS	HOURS REMOTE OPERATION: 24 / 24
X V H F X U H F H F	LOCATION: KHLC / KHYS		ADJUSTMENT: 91 / 70

4. MONITOR STATUS	PRIMARY NAVAID:	
	MONITOR POINT:	
	HRS OPTN:	CAT 1
		CAT 3

5. APPROACH & RUNWAY LIGHTING		
		ALS
		(S) SALS
		MALS
		HIRL
		MIRL
		REIL
		TDZ
		C/LINE
	X	OTHER (SPECIFY) PAPI-4L 18 (PCL), 36 (PCL)

6. RUNWAY MARKINGS	BASIC	
	ALL WEATHER	
	INSTRUMENT NPI-F 18, 36	
7. RUNWAY VISUAL RANGE	APPROACH	
	MIDFIELD	
	ROLL OUT	
8. GLIDE PATH	GP ANGLE: 3.00	ELEV RWY THRESHOLD: 1998.9
	DISTANCE FROM RWY:	ELEV GP ANTENNA:
		THRESHOLD CROSSING HEIGHT: 40.0

9. FINAL APPROACH COURSE AIMING	X	RUNWAY THRESHOLD	FT. FROM THRESHOLD
	X	ON CENTERLINE	FT. FROM CENTERLINE

10. WAIVERS: NONE

PART D - PREPARED BY: JOHN R. ROSARIO	DATE: 11/29/2012
TITLE: AERONAUTICAL INFORMATION SPECIALIST	OFFICE: AJV-353

PART C - REMARKS:

VDP NOT ESTABLISHED - REMOTE ALSTG IN USE.

WORST CASE RASS ADJUSTMENT USED. DIFFERENCE IS MINIMAL AND SIMPLIFIES NOTE

VEGETATION HEIGHT 25 FEET ALL AREAS

TERPS 289 APPLIED TO 2395 AAO 391555N/0991925W

ORDER 8260.3, VOLUME 1, CHAPTER 2, NEW CIRCLING CRITERIA APPLIED.
CAT A: 1.32NM
CAT B: 1.88NM
CAT C: 2.96NM

CIRCLING RESTRICTED TO EAST OF RWY 18/36 DUE TO HIGHER OBSTRUCTIONS IN REMAINING SECTOR

RASS PRESSURE PATTERNS SAME
KRCP 1999, KHLC 2238.1 / KHYS 1999.1
RA = KHLC 90.06 / KHYS 69.64.

SEE ATTACHED AIRSPACE LETTER.□□□□

VGSI DATA: 3.00/40

KHLC ASOS AND KHYS AWOS ON SERVICE A

MISSED APPROACH HOLDING AT 6000 DUE TO RADIO LIMITATIONS BELOW 6000

CIRCLING RWY 32 NA AT NIGHT. NO SURVEY TO THIS RUNWAY. VISUAL SURFACES CANNOT BE VERIFIED CLEAR

APPROACH LIMITED TO CATS A/B/C PER FPT REQUEST

THIS FORM WAS PDF EDITED
ADDED BLOCK 2 AND BLOCK 3 DATA

STANDARD INSTRUMENT APPROACH PROCEDURE DATA RECORD

PART - A OBSTRUCTION DATA

1. APP SEGMENT	FROM	TO	OBSTRUCTION	COORDINATES	ELEV. MSL	ROC	ALT. ADJUSTMENTS	MIN. ALT.
FINAL: LNAV STEPDOWN	**WAJHU/2.10 NM TO**	**RW36**	**12. TRMSN TWR**	**391853.96N/0991732.80W**	**2077 (1A)**	**250**	**RA91**	**2420**
	RW36		**(KRCPT0075)**					

3. MISSED APPROACH									
	MAP:								
	ELEV:								

4. CIRCLING AREA	DISTANCE		HT. ABV. ARPT.							
CATEGORY A	1.3 NM	REQUIRED	350	ACTUAL						
CATEGORY B	1.5 NM		450							
CATEGORY C	1.7 NM		450							
CATEGORY D	2.3 NM		550							
CATEGORY E	4.5 NM		550							

5. MINIMUM SAFE ALTITUDES

PRIMARY NAVAID:

SECTOR	OBSTRUCTION	BRG/DIST	ELEVATION (MSL)	M S A	SECTOR	OBSTRUCTION	BRG/DIST	ELEVATION (MSL)	M S A

CITY AND STATE		FACILITY	PROCEDURE AND AMENDMENT NO:	REGION
STOCKTON, KS	**ELEVATION: 1999** AIRPORT NAME: **ROOKS COUNTY**	**RNAV**	**RNAV (GPS) RWY 36, ORIG**	QUALITY CHECKED ACE

PART B - SUPPLEMENTAL DATA

1. COMMUNICATIONS WITH:	2. WEATHER SERVICE			3. ALTIMETER SETTING
SATISFACTORY ON:		N W S	OTHER:	SOURCE:
		F A A		DISTANCE:
		A / C		HOURS REMOTE OPERATION:
V H F / U H F / H F	LOCATION:			ADJUSTMENT:

4. MONITOR STATUS	PRIMARY NAVAID:	
	MONITOR POINT:	
	HRS OPTN: CAT 1	
	HRS OPTN: CAT 3	
5. APPROACH & RUNWAY LIGHTING		**ALS**
		(S) SALS
		MALS
		HIRL
		MIRL
		REIL
		TDZ
		C/LINE
		OTHER (SPECIFY)
6. RUNWAY MARKINGS	BASIC	
	ALL WEATHER	
	INSTRUMENT	
7. RUNWAY VISUAL RANGE	APPROACH	
	MIDFIELD	
	ROLL OUT	
8. GLIDE PATH	GP ANGLE:	ELEV RWY THRESHOLD:
	DISTANCE FROM RWY:	ELEV GP ANTENNA:
		THRESHOLD CROSSING HEIGHT:
9. FINAL APPROACH COURSE AIMING	RUNWAY THRESHOLD	FT. FROM THRESHOLD
	ON CENTERLINE	FT. FROM CENTERLINE

10. WAIVERS:

PART D - PREPARED BY:	DATE:
TITLE:	OFFICE:

PART C - REMARKS:

RADIO FIX AND HOLDING DATA RECORD

NAME: UTUVE **STATE:** KS **COUNTRY:** US

LATITUDE/LONGITUDE: 391009.39N/0991833.78W **TYPE:** WP

AIRSPACE DOCKET: **FIX TYPE OF ACTION:** ESTABLISH

HOLDING: **HOLDING TYPE OF ACTION:** ESTABLISH

PATTERNS:

PAT	DIR	IDENT	TYPE	RAD/CRS/BRG	CRS INBOUND	TURN (L OR R)	LEG LENGTH TIME	LEG LENGTH DME	HOLDING ALTITUDES MIN	HOLDING ALTITUDES MAX	TEMPLATES MIN	TEMPLATES MAX
1	S		WP	176.19	356.19	R		5	4000	6000	5	6
2	S		WP	176.19	356.19	R		5	6000	10000	6	10

CONTROLLING OBSTRUCTIONS:

PAT	AIRSPEED	OBSTRUCTION	COORDINATES	ELEVATION	ACCURACY CODE
1	200	TOWER (20-001743)	391318.00N/0991617.00W	2554	2C
2	200	TOWER (20-001743)	391318.00N/0991617.00W	2554	2C
2	310	TOWER (20-001632)	390115.00N/0992813.00W	3189	2D

HOLDING RESTRICTIONS:
HOLDING LIMITED TO ESTABLISHED PATTERNS

PROCEDURES REQUIRING CLIMB-IN-HOLD:

PAT	PROCEDURE TITLE	AIRPORT IDENT	CITY	STATE
1	RNAV (GPS) RWY 18	KRCP	STOCKTON	KS (US)

REMARKS:
PRECIPITOUS TERRAIN EVALUATION COMPLETED

FIX USE:

USE TYPE	USE TITLE	FAC	PAT	AIRPORT IDENT	CITY	STATE
IAP	RNAV (GPS) RWY 18		1	KRCP	STOCKTON	KS (US)
IAP	RNAV (GPS) RWY 36		2	KRCP	STOCKTON	KS (US)

REQUIRED CHARTING: IAP

COMPULSORY REPORTING POINT: NO

RECORD REVISION NUMBER: ORIG **DATE OF REVISION:** 05/02/2013

DEVELOPED BY: **DATE:** 12/18/2012 **OFFICE:** AJV-353 **NAME:** JOHN ROSARIO

APPROVED BY: **DATE:** **OFFICE:** AJV-353 **NAME:** LARRY STROUT

SIGNATURE:

DISTRIBUTION:
NFDC
FPO: CEN
ARTCC: ZDV
ATC FACILITY:
OTHER: ZKC

QUALITY CHECKED

RADIO FIX AND HOLDING DATA RECORD

NAME: WAJHU **STATE:** KS **COUNTRY:** US

LATITUDE/LONGITUDE: 391816.95N/0991820.77W **TYPE:** WP

AIRSPACE DOCKET: **FIX TYPE OF ACTION:** ESTABLISH

FIX USE:

USE TYPE	USE TITLE	FAC	PAT	AIRPORT IDENT	CITY	STATE
IAP	RNAV (GPS) RWY 36			KRCP	STOCKTON	KS (US)

REQUIRED CHARTING: IAP

COMPULSORY REPORTING POINT: NO

RECORD REVISION NUMBER: ORIG **DATE OF REVISION:** 05/02/2013

DEVELOPED BY: **DATE:** 11/15/2012 **OFFICE:** AJV-353 **NAME:** JOHN ROSARIO

APPROVED BY: **DATE:** **OFFICE:** AJV-353 **NAME:** LARRY STROUT

SIGNATURE:

DISTRIBUTION: **NFDC**
FPO: CEN
ARTCC: ZDV
ATC FACILITY:
OTHER:

QUALITY 10 CHECKED

RADIO FIX AND HOLDING DATA RECORD

NAME: ZAVOV **STATE:** KS **COUNTRY:** US

LATITUDE/LONGITUDE: 393126.05N/0991759.62W **TYPE:** WP

AIRSPACE DOCKET: **FIX TYPE OF ACTION:** ESTABLISH

HOLDING: **HOLDING TYPE OF ACTION:** ESTABLISH

PATTERNS:

PAT	DIR	IDENT	TYPE	RAD/CRS/BRG	CRS INBOUND	TURN (L OR R)	LEG LENGTH TIME	LEG LENGTH DME	HOLDING ALTITUDES MIN	HOLDING ALTITUDES MAX	TEMPLATES MIN	TEMPLATES MAX
1	N		WP	356.19	176.19	R		5	4000	6000	5	6
2	N		WP	356.19	176.19	R		5	6000	10000	6	10

CONTROLLING OBSTRUCTIONS:

PAT	AIRSPEED	OBSTRUCTION	COORDINATES	ELEVATION	ACCURACY CODE
1	200	TOWER (20-001032)	393702.00N/0991756.00W	2467	5D
2	200	TOWER (20-001032)	393702.00N/0991756.00W	2467	5D
2	310	TOWER (20-001964)	395037.00N/0992045.00W	2535	5E

HOLDING RESTRICTIONS:
HOLDING LIMITED TO ESTABLISHED PATTERNS

PROCEDURES REQUIRING CLIMB-IN-HOLD:

PAT	PROCEDURE TITLE	AIRPORT IDENT	CITY	STATE
2	RNAV (GPS) RWY 36	KRCP	STOCKTON	KS (US)

REMARKS:
PRECIPITOUS TERRAIN EVALUATION COMPLETED
ATC REQUESTED A MISSED APPROACH ALT OF 6000 TO ENSURE COMM FOR THE MISSED APPROACH SEGEMENT ON RWY 36. 6000 REQUIRES A 5 MILE LEG LENGTH TO BE USED. TO AVOID CONFUSION BETWEEN HOLD IN LIEU AND THE C-I-H ALTITUDES, 5 MILE LEG LENGTH USE.

FIX USE:

USE TYPE	USE TITLE	FAC	PAT	AIRPORT IDENT	CITY	STATE
IAP	RNAV (GPS) RWY 18		1	KRCP	STOCKTON	KS (US)
IAP	RNAV (GPS) RWY 36		2	KRCP	STOCKTON	KS (US)

REQUIRED CHARTING: IAP

COMPULSORY REPORTING POINT: NO

RECORD REVISION NUMBER: ORIG **DATE OF REVISION:** 05/02/2013

DEVELOPED BY: **DATE:** 12/17/2012 **OFFICE:** AJV-353 **NAME:** JOHN ROSARIO

APPROVED BY: **DATE:** **OFFICE:** AJV-353 **NAME:** LARRY STROUT

SIGNATURE:

DISTRIBUTION: **NFDC**
FPO: CEN
ARTCC: ZDV
ATC FACILITY:
OTHER:

QUALITY A CHECKED

RADIO FIX AND HOLDING DATA RECORD

NAME: ZOMOR **STATE:** KS **COUNTRY:** US

LATITUDE/LONGITUDE: 391528.72N/0991825.26W **TYPE:** WP

AIRSPACE DOCKET: **FIX TYPE OF ACTION:** ESTABLISH

FIX USE:

USE TYPE	USE TITLE	FAC	PAT	AIRPORT IDENT	CITY	STATE
IAP	RNAV (GPS) RWY 36			KRCP	STOCKTON	KS (US)

REQUIRED CHARTING: IAP

COMPULSORY REPORTING POINT: NO

RECORD REVISION NUMBER: ORIG **DATE OF REVISION:** 05/02/2013

DEVELOPED BY: **DATE:** 12/18/2012 **OFFICE:** AJV-353 **NAME:** JOHN ROSARIO

APPROVED BY: **DATE:** **OFFICE:** AJV-353 **NAME:** LARRY STROUT

SIGNATURE:

DISTRIBUTION:
NFDC
FPO: CEN
ARTCC: ZDV
ATC FACILITY:
OTHER:

QUALITY 10 CHECKED

TERMINAL AIRSPACE DATA REQUIREMENTS

CITY: **STOCKTON** STATE: **KS**

AIRPORT NAME: **ROOKS COUNTY** ID: **KRCP**

PROCEDURE: **RNAV (GPS) RWY 36** AMDT: **ORIG**

DOCKET # :
(96-AXX-X/Required/Not Required)

ALL DIST TO 1/100 NM; ELEV TO NEAREST FT; COORD TO 1/100 SEC; DEG TO 1/100 DG.

1. Distance from **THLD** to 1000' point **3.65**
   (Enter THLD, FAF, ARP, FACILITY, as appropriate)
2. Width of **FINAL** segment at 1000' point **1.20**
   (Enter appropriate segment , final, intermediate, etc.)
3. True Course of **FINAL** segment containing 1000' point **001.19**
4. High Terrain in **FINAL** segment containing 1000' point **2195**
5. Distance from **FAF** to 1500' point **4.72**
   (If 1500' point in PT maneuvering area or holding pattern note in remarks)
6. Width of **INTERMEDIATE** segment at 1500' point **4.00**
7. True Course of **INTERMEDIATE** segment containing 1500' point **001.19**
8. High Terrain in **INTERMEDIATE** segment containing 1500' point **2182**
9. Threshold Coordinates (if straight-in) ... **392023.03N** / **0991817.40W**
10. ARP Coordinates ..... **392047.70N** / **0991816.70W**
11. Runway Approach End and distance furthest from ARP.....RWY **32**
    Distance **0.43** NM
12. FAF Coordinates ..... **391528.72N** / **0991825.26W**
    (Click to Select)

REMARKS: Approach/Drawing attached. Intermediate WP UTUVE 391009.39N/0991833.78W