NM 7 14 21 28 35 42 49

FT 42000 84000 126000 168000 210000 252000 294000

fpocdc | chsrnv3b (PROD) | 9 Mar 2011 15:48:36 | 1" = 41666.7 feet (MAP)

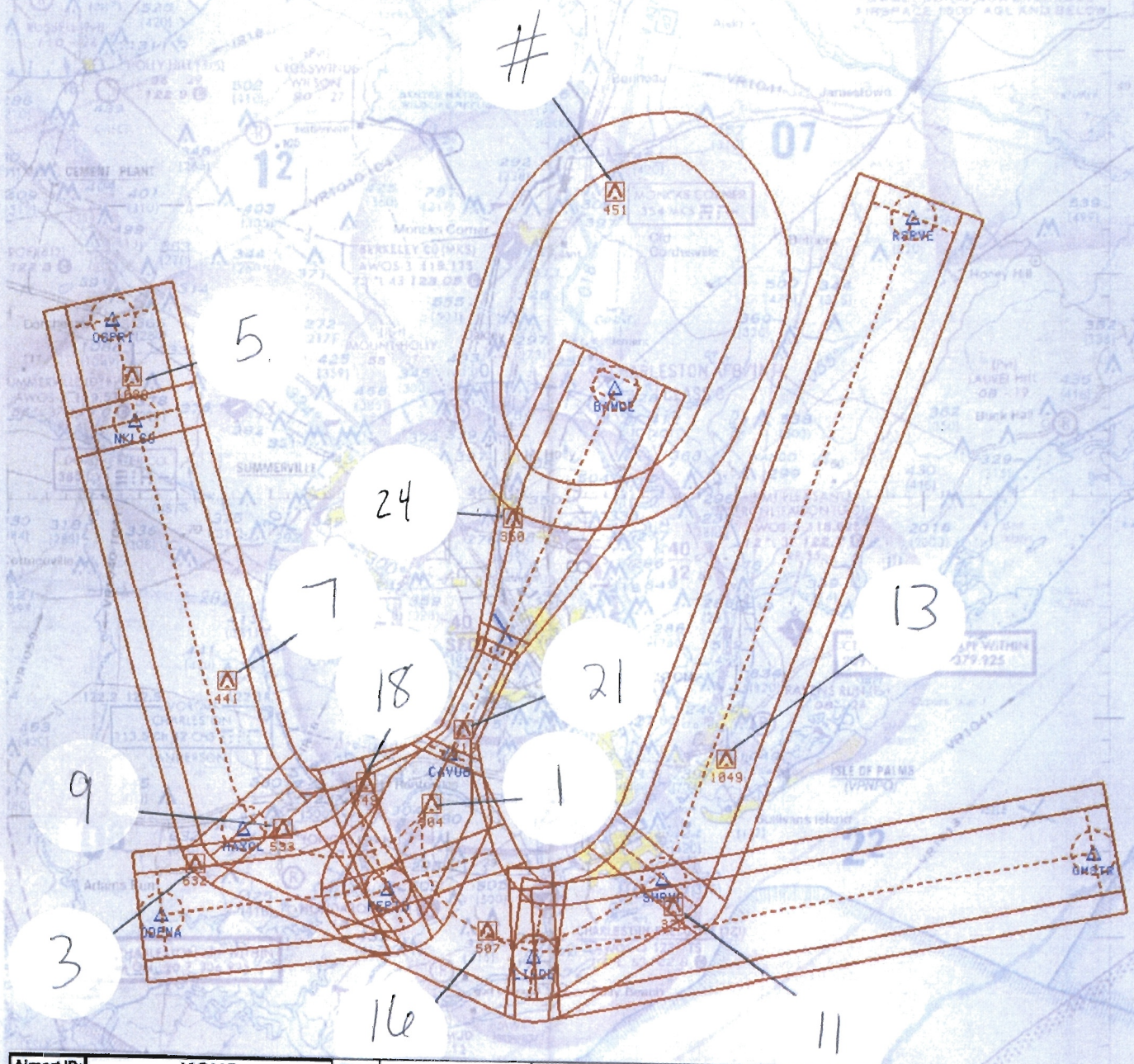

Airport ID:	KCHS	FM 9			
Apt Name:	CHARLESTON AFB/INTL	No	TRANSITION/SEGMENT	OBSTRUCTION	ELEV
City:	CHARLESTON	3	DDENA INIT	TOWER	632
State:	SC	5	OSPRI INIT	TOWER	1088
Scale:	1:500K	7	NKLSS INIT	TOWER	441
Proc ID:	RNAV (GPS) Y RWY 03	9	HAXOL INIT	TOWER	533
Amdt #:	2A	11	GMSTR/SHRMP INIT	TOWER	320

#			
13	RSRV INIT	TOWER	1049
16	LIMDE INIT	TOWER	507
1	INTERMED	TOWER	304
21	LFINAL	AAO	219
24	MISSED LVL SFC	TOWER	350
18	MISSED HOLD OSPRI INtmed	TOWER tower	451 449

Airport ID:	KCHS	FM 9			
Apt Name:	CHARLESTON AFB/INTL	No	TRANSITION/SEG MENT	OBSTRUCTION	ELEV
City:	CHARLESTON	1	FEEDER/INTER	TOWER	304
State:	SC	16	HIL	TOWER	507
Scale:	1:500K	21	LFINAL	AAO	219
Proc ID:	RNAV (GPS) Y RWY 03	24	MISSED LVL	TOWER	350
Amdt #:	2A	#	MISSED HOLD	TOWER	451

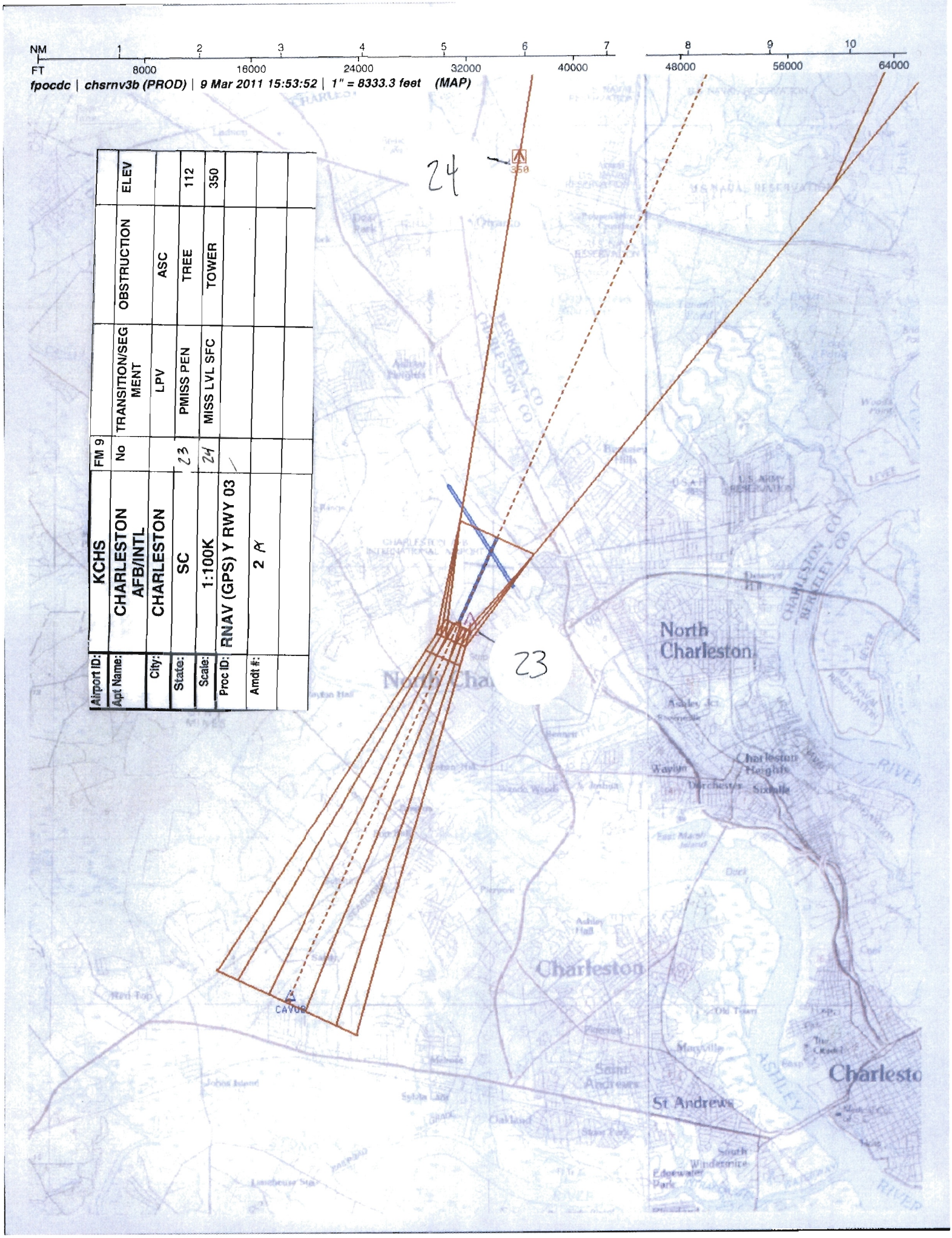
NM 1 2 3 4 5 6 7 8 9 10
FT 8000 16000 24000 32000 40000 48000 56000 64000
fpocdc | chsrnv3b (PROD) | 9 Mar 2011 15:53:52 | 1" = 8333.3 feet (MAP)
24
23
North Charleston
Charleston
St Andrews
Charleston Heights
CAVUD
Airport ID: KCHS
Apt Name: CHARLESTON AFB/INTL
City: CHARLESTON
State: SC
Scale: 1:100K
Proc ID: RNAV (GPS) Y RWY 03
Amdt #: 2 A
FM 9
No
23
24
TRANSITION/SEGMENT
LPV
PMISS PEN
MISS LVL SFC
OBSTRUCTION
ASC
TREE
TOWER
ELEV
112
350

Airport ID:	KCHS	FM 9			
Apt Name:	CHARLESTON AFB/INTL	No	TRANSITION/SEGMENT	OBSTRUCTION	ELEV
City:	CHARLESTON	20	VFINAL	TOWER	153
State:	SC	24	MISS LVL SFC	TOWER	350
Scale:	1:100K				
Proc ID:	RNAV (GPS) Y RWY 03				
Amdt #:	2 A				

Airport ID:	KCHS	FM 9			
Apt Name:	CHARLESTON AFB/INTL	No	TRANSITION/SEGMENT	OBSTRUCTION	ELEV
City:	CHARLESTON	21	LFINAL	AAO	219
State:	SC	26	CIRC ALL CAT	ATCT	233
Scale:	1:100K	24	MISS LVL SFC	TOWER	350
Proc ID:	RNAV (GPS) Y RWY 03				
Amdt #:	2A				