Flight Procedure Tracking Form	Action: FLIGHT CHECK	Task Type: IAP	Date Open: 04/28/2011	Task #: 2011042821826504001	Request #: 20110428218265
Procedure: GLS RWY 8 R ORIG		Airport ID: KIAH	Airport: GEORGE BUSH INTERCONTINENTAL/HOUSTON		Reimbursable #:
City: HOUSTON	ST: TX	GPS #:		Estimated Chart Date: 07/26/2012	FICO #:
Fac ID: IAH	Fac. Type: GS	Specialist: SCOTT CORY			

Procedure Review

	Rec'd	Rel'd	Full Name	Comments
Lead:	05/31/2011	02/22/2012	JILL OLSON	
QA:	02/22/2012	02/22/2012	STEVEN SZUKALA	
Liaison:	02/22/2012		Terrell	WAIVER

Procedure Comments: ENROUTE **Remark Type:** INFORMATION

pg 12 of 16

HOUSTON, TX GEORGE BUSH INTERCONTINENTAL/HOUSTON (KIAH) GLS RWY 8R, ORIG ENROUTE-YES FC: 5.29.12 PUB: 7.26.12

ATTACHED FORMS: 8260-3; 8260-10; 8260-9; 8260-2(S): DPLOY-INT, REV 7; EELPO-INT, REV 4; JELLI-INT, REV 8; LASSY-INT, REV 1; MATON-INT, REV 8; MKAYE-INT, REV 7; RIEGN-INT, ORIG.

CONTACT: JILL OLSON, AJV-353 LEAD, 405.954.9568:

HOUSTON, TEXAS

AL-5461 (FAA)

LAAS	APP CRS	Rwy Idg	9402
CH 20251	085°	THRE	96
GIAH		Apt Elev	97

GLS RWY 8R

HOUSTON/GEORGE BUSH INTERCONTINENTAL/HOUSTON (IAH)

V NA — For inoperative MALSR, increase GLS all Cats visibility to RVR 4000. DME/DME RNP-0.3 NA. GPS required. Simultaneous approach authorized with Rwy 8L and Rwy 9. Use of FD or AP providing RNAV track guidance required during simultaneous operations.

MALSR

MISSED APPROACH: Climb to 3000 direct MKAYE and hold.

ATIS	HOUSTON APP CON	HOUSTON TOWER	GND CON	CLNC DEL
124.05	120.05 379.1 EAST 124.35 316.15 WEST	120.725 125.35 127.3 135.15 288.25 290.2	118.575 119.95 121.7	128.1

RADAR REQUIRED

PROTOTYPE: NOT FOR NAVIGATION

MISSED APCH FIX
(090°T) 4 NM
085°
265° (270°T)
MKAYE

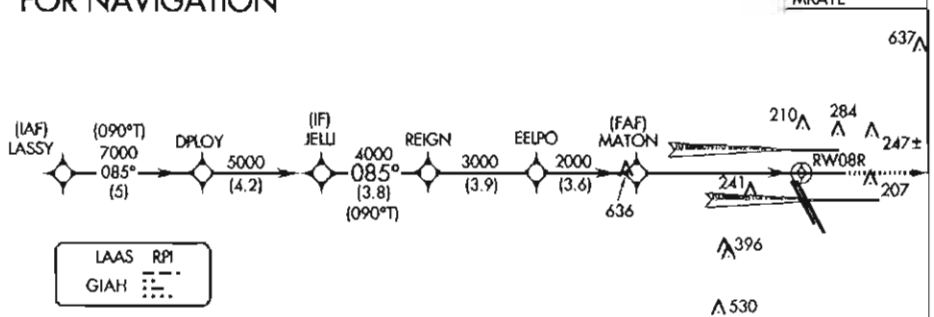

LAAS RPI
GIAH

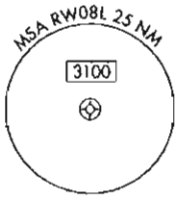

DPLOY: 2959.544'N/9545.884'W
EELPO: 2959.588'N/9532.146'W
JELLI: 2959.563'N/9541.000'W
LASSY: 2959.519'N/9551.642'W
MATON: 2959.596'N/9527.984'W
MKAYE: 2959.583'N/9454.918'W
REIGN: 2959.576'N/9536.662'W
RW08R: 2959.605'N/9521.298'W

ELEV 97 | D | THRE 96

085° to RW08R

VGSI and GLS glidepath not coincident (VGSI Angle 3.00/TCH 71).

3000 MKAYE

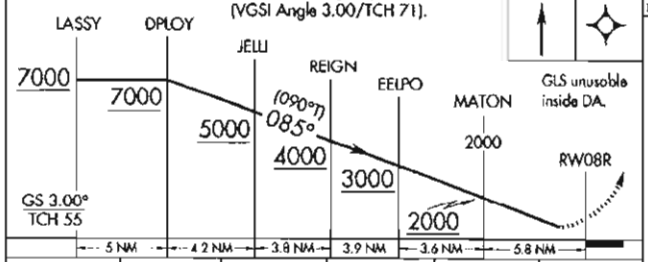

CATEGORY	A	B	C	D	E
GLS DA	296/24 200 (200-½)				

TDZ/CL Rwys 8R, 8L, 15R, 26R, 26L, 27 and 33L
HIRL all Rwys

HOUSTON, TEXAS
Orig FIG

HOUSTON/ GEORGE BUSH INTERCONTINENTAL/HOUSTON (IAH)
29° 59' N-95° 20' W

GLS RWY 8R

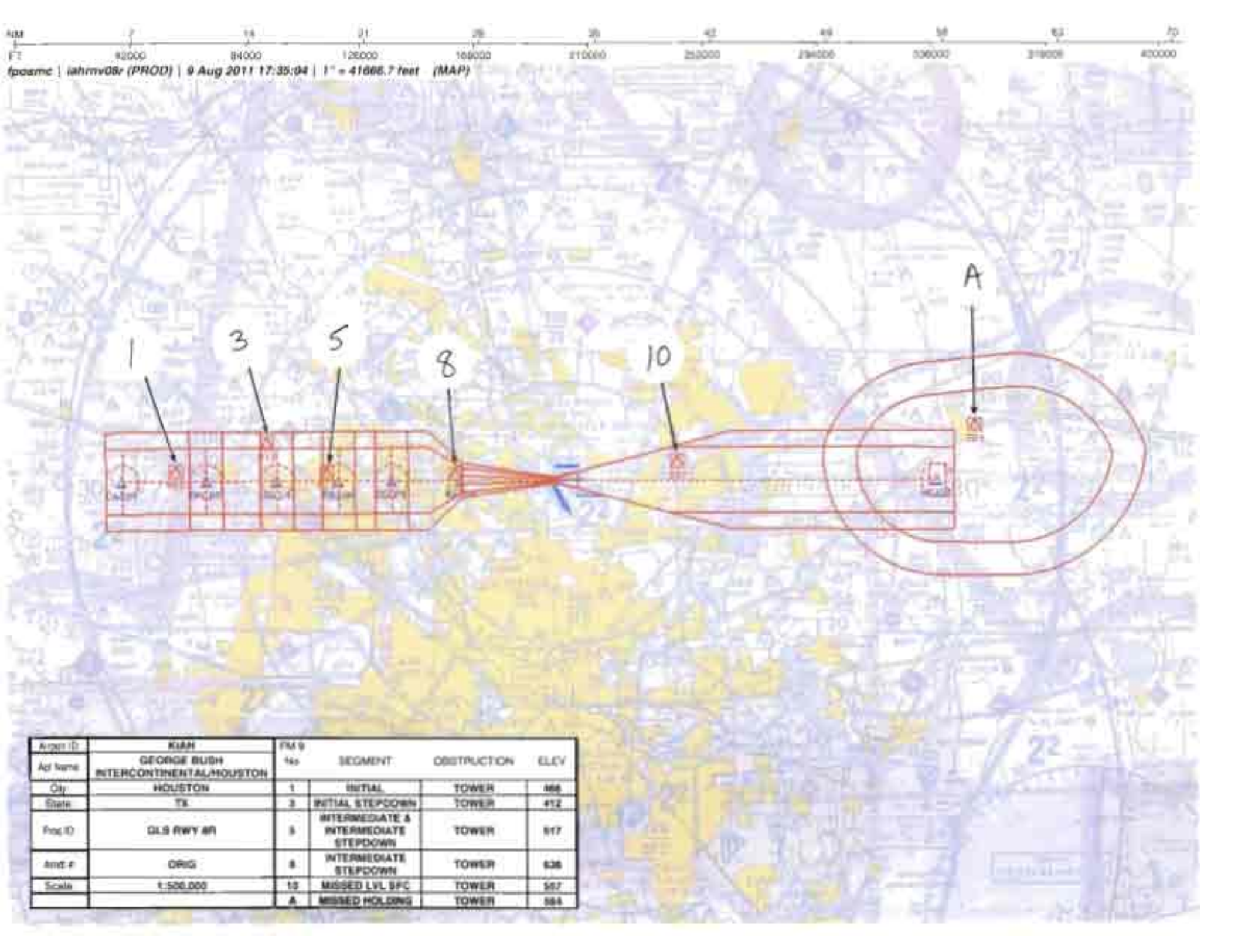

Airport ID:	KIAH	FMS Nbr	SEGMENT	OBSTRUCTION	ELEV
Apt Name	GEORGE BUSH INTERCONTINENTAL/HOUSTON				
City	HOUSTON	1	INITIAL	TOWER	468
State	TX	3	INITIAL STEPDOWN	TOWER	412
Proc ID	GLS RWY 8R	5	INTERMEDIATE & INTERMEDIATE STEPDOWN	TOWER	517
Amdt #	ORIG	8	INTERMEDIATE STEPDOWN	TOWER	636
Scale	1:500,000	10	MISSED LVL SFC	TOWER	507
		A	MISSED HOLDING	TOWER	584

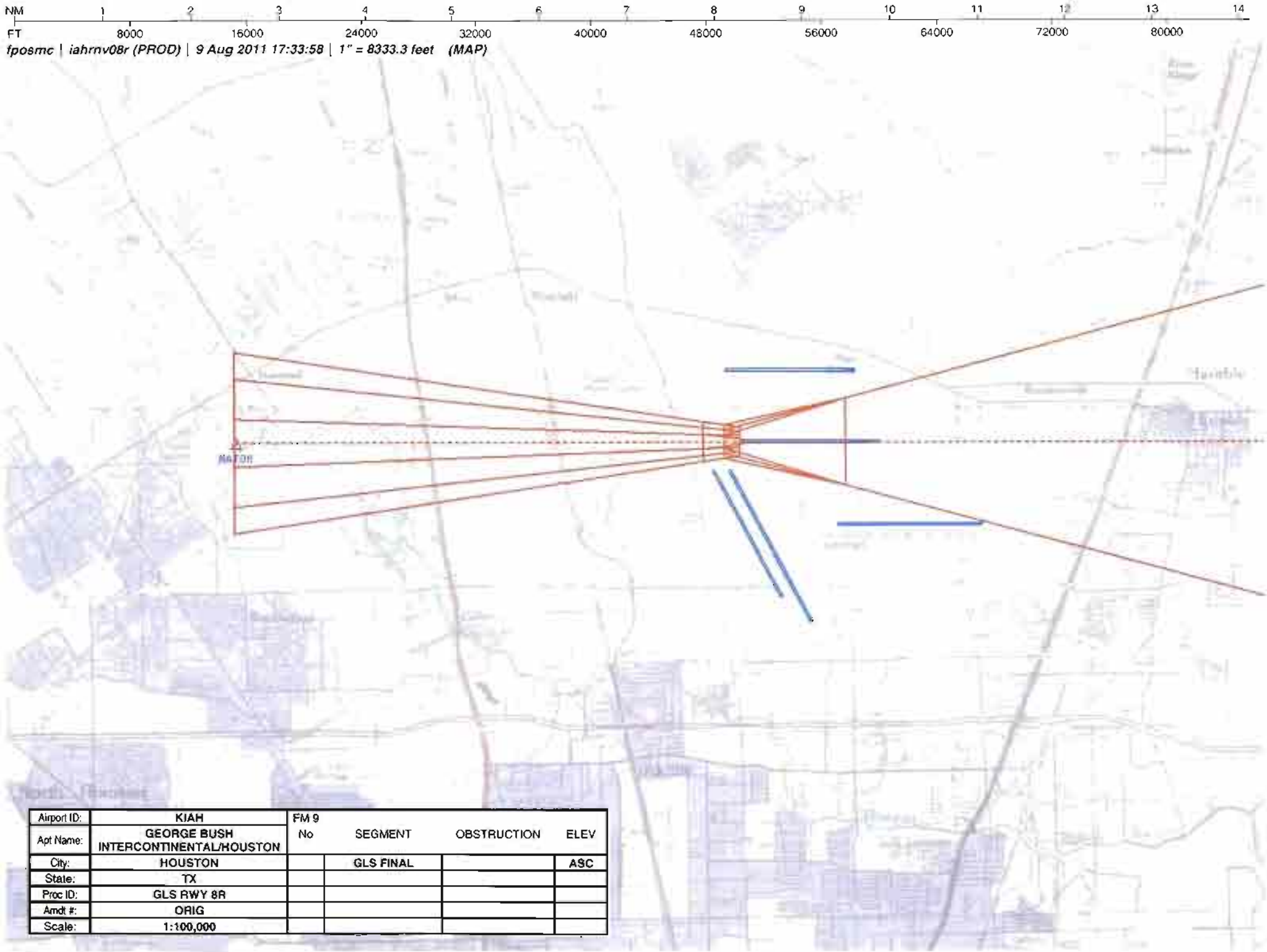

Airport ID:	KIAH	FM 9 No	SEGMENT	OBSTRUCTION	ELEV
Apt Name:	GEORGE BUSH INTERCONTINENTAL/HOUSTON				
City:	HOUSTON		GLS FINAL		ASC
State:	TX				
Proc ID:	GLS RWY 8R				
Amdt #:	ORIG				
Scale:	1:100,000				

US DEPARTMENT OF TRANSPORTATION
FEDERAL AVIATION ADMINISTRATION

GLS - STANDARD INSTRUMENT APPROACH PROCEDURE TITLE 14 CFR PART 97.29

Bearings, headings, courses, and radials are magnetic. Elevations and altitudes are in feet, MSL, except HAT, HAA, TCH, and RA. Altitudes are minimum altitudes unless otherwise indicated. Ceilings are in feet above airport elevation. Distances are in nautical miles unless otherwise indicated, except visibilities which are in statute miles or in feet RVR.

TERMINAL ROUTES

FROM	TO	COURSE AND DISTANCE	ALTITUDE
LASSY (IAF)	DPLOY (FB)	084.69 / 5.00	7000
DPLOY	JELLI (FB)	084.73 / 4.24	5000
JELLI (IF)	REIGN (FB)	084.78 / 3.77	4000
REIGN	EELPO (FB)	084.81 / 3.92	3000
EELPO	MATON (FB)	084.85 / 3.61	2000
MATON (FAF)	RW08R (MAP) (FO)	084.88 / 5.81	
RW08R (MAP)	296 MSL	084.88	
296 MSL	MKAYE (FO)		3000

MISSED APPROACH

MAP: DA

CLIMB TO 3000 DIRECT MKAYE AND HOLD.

ADDITIONAL FLIGHT DATA:
HOLD E, RT, 265.17 INBOUND.
DISTANCE TO THLD FROM 200 HATH: 0.45 NM.
LAAS CHANNEL # 20251
REFERENCE PATH ID: GIAH
CHART LOC RWY 8L AND RWY 9.
LTP HAE: 1.4 M

1. PT ____ SIDE OF COURSE ____ OUTBOUND ____ FT WITHIN ____ MILES OF ____ (IAF)
2. PROFILE STARTS AT LASSY
3. FAC: 084.88 FAF: ____ DIST FAF TO MAP: 5.81 THLD: ____
4. MIN. ALT: LASSY 7000, DPLOY 7000, JELLI 5000, REIGN 4000, EELPO 3000, MATON 2000
5. DIST TO THLD FROM OM: 5.81 MM: ____ IM: ____ 150 HAT: ____ 100 HAT: ____ GS ANT: ____
6. MIN GS INCPT: 2000 GS ALT AT: MATON 2000 OM: ____ MM: ____ IM: ____
7. GS ANGLE: 3.00 TCH: 54.8 34:1 IS CLEAR
8. MSA FROM: RW08R 3100

MAG VAR: 5E EPOCH YEAR: 2000

MINIMUMS

TAKEOFF: SEE FAA FORM 8260-15A FOR THIS AIRPORT | ALTERNATE: N A | X

CATEGORY =====>	A			B			C			D			E		
	DH/MDA	VIS	HAT/HAA	DH/MDA	VIS	HAT/HAA	DH/MDA	VIS	HAT/HAA	DH/MDA	VIS	HAT/HAA	DH/MDA	VIS	HAT/HAA
GLS DA	296	2400	200	296	2400	200	296	2400	200	296	2400	200	296	2400	200

NOTES:
CHART NOTE: FOR INOPERATIVE MALSR, INCREASE GLS ALL CATS VISIBILITY TO RVR 4000.
CHART NOTE: DME/DME RNP-0.3 NA.
CHART NOTE: GPS REQUIRED.
CHART PLANVIEW NOTE: RADAR REQUIRED.
(SEE FORM 8260-10)

QUALITY CHECKED

CITY AND STATE	ELEVATION: 97 THRE: 96 AIRPORT NAME:	FACILITY IDENTIFIER:	PROCEDURE NO./AMDT NO./EFFECTIVE DATE:	SUP:
HOUSTON, TX	GEORGE BUSH INTERCONTINENTAL/HOUSTON	GIAH	GLS RWY 8R, ORIG	AMDT: NONE
				DATED

ALL AFFECTED PROCEDURES REVIEWED?	COORDINATES OF FACILITIES	REQUIRED EFFECTIVE DATE
[ ] YES [X] NO		ROUTINE

COORDINATED WITH:

ATA	AAT	ALPA	APA	AOPA	NBAA	OTHER (specify)
[X]	[ ]	[X]	[X]	[X]	[X]	[X] ZHU, IAH APP CON, IAH TOWER, AMGR

FLIGHT CHECKED BY		
NAME:	FIFO	DATE:

DEVELOPED BY		
NAME:	FIFO	DATE:
SCOTT M. CORY	AJV-353	12/07/2011

APPROVED BY		
NAME:	FIFO	DATE:
LARRY H STROUT MANAGER	AJV-353	

CHANGES:

1. ORIGINAL PROCEDURE.

REASONS:

1. FPT REQUEST.

03/12/2012: THIS IS AN UPDATED COPY OF THE FORM DEVELOPED ON 12/07/2011.
1. ADDED PROFILE NOTE: GLS UNUSABLE INSIDE DA.

04/02/2012: THIS IS AN UPDATED COPY OF THE FORM DEVELOPED ON 12/07/2011.
1. ADDED ARINC 8260-10 FORMS AND UPDATED PAGE NUMBERS.

US DEPARTMENT OF TRANSPORTATION - FEDERAL AVIATION ADMINISTRATION

GLS - STANDARD

INSTRUMENT APPROACH PROCEDURE - TITLE 14 CFR PART 97.29

Bearings, headings, courses, and radials are magnetic. Elevations and altitudes are in feet, MSL, except HAT, HAA, TCH, and RA. Altitudes are minimum altitudes unless otherwise indicated. Ceilings are in feet above aiport elevation. Distances are in nautical miles unless otherwise indicated, except visibilities which are in statute miles or in feet RVR.

NOTES, (CONT.):
CHART PROFILE NOTE: VGSI AND GLS GLIDEPATH NOT COINCIDENT.
CHART NOTE: SIMULTANEOUS APPROACH AUTHORIZED WITH RWY 8L AND RWY 9.
CHART NOTE: USE OF FD OR AP PROVIDING RNAV TRACK GUIDANCE REQUIRED DURING SIMULTANEOUS OPERATIONS.
CHART PROFILE NOTE: GLS UNUSABLE INSIDE DA.

QUALITY 1 CHECKED

CITY AND STATE	ELEVATION: 97 THRE: 96	FACILITY IDENTIFIER:	PROCEDURE NO./ AMDT NO./EFFECTIVE DATE:	SUP:
HOUSTON, TX	AIRPORT NAME:	GIAH	GLS RWY 8R, ORIG	AMDT: NONE
	GEORGE BUSH INTERCONTINENTAL/HOUSTON			DATED:

ALL AFFECTED PROCEDURES REVIEWED? ☐ YES ☐ NO	COORDINATES OF FACILITIES	REQUIRED EFFECTIVE DATE

COORDINATED WITH:

ATA ☐ AAT ☐ ALPA ☐ APA ☐ AOPA ☐ NBAA ☐ OTHER (specify) _____

FLIGHT CHECKED BY		
NAME:	FIFO	DATE:

DEVELOPED BY		
NAME:	FIFO	DATE:

APPROVED BY		
NAME:	FIFO	DATE:

CHANGES:

REASONS:

Bearings, headings, courses, and radials are magnetic. Elevations and altitudes are in feet, MSL, except HAT, HAA, TCH, and RA. Altitudes are minimum altitudes unless otherwise indicated. Ceilings are in feet above aiport elevation. Distances are in nautical miles unless otherwise indicated, except visibilities which are in statute miles or in feet RVR.

FAS DATA BLOCK INFORMATION

DATA FIELD	DATA
OPERATION TYPE	0
SBAS SERVICE PROVIDER IDENTIFIER	14
AIRPORT IDENTIFIER	KIAH
RUNWAY	RW08R
APPROACH PERFORMANCE DESIGNATOR	1
ROUTE INDICATOR	
REFERENCE PATH DATA SELECTOR	0
REFERENCE PATH IDENTIFIER (APPROACH ID)	GIAH
LTP/FTP LATITUDE	295936.2990N
LTP/FTP LONGITUDE	0952117.8700W
LTP/FTP ELLIPSOIDAL HEIGHT	+00014
FPAP LATITUDE	295936.3900N
FPAP LONGITUDE	0951930.9500W
THRESHOLD CROSSING HEIGHT (TCH)	00054.8
TCH UNITS SELECTOR (METERS OR FEET USED)	F
GLIDEPATH ANGLE (GPA)	03.00
COURSE WIDTH AT THRESHOLD	106.75
LENGTH OFFSET	0000
CRC REMAINDER	5E010130

ADDITIONAL PATH POINT RECORD INFORMATION

ICAO CODE	K4
LTP ORTHOMETRIC HEIGHT	+00294
FPAP ORTHOMETRIC HEIGHT	+00294

QUALITY CHECKED

CITY AND STATE	ELEVATION: 97 THRE: 96	FACILITY IDENTIFIER:	PROCEDURE NO./ AMDT NO./EFFECTIVE DATE:	SUP:
HOUSTON, TX	AIRPORT NAME:	GIAH	GLS RWY 8R, ORIG	AMDT: NONE
	GEORGE BUSH INTERCONTINENTAL/HOUSTON			DATED:

ALL AFFECTED PROCEDURES REVIEWED?	COORDINATES OF FACILITIES	REQUIRED EFFECTIVE DATE
☐ YES ☐ NO		

COORDINATED WITH:

ATA ☐ AAT ☐ ALPA ☐ APA ☐ AOPA ☐ NBAA ☐ OTHER (specify) _____

FLIGHT CHECKED BY		
NAME:	FIFO	DATE:
DEVELOPED BY		
NAME:	FIFO	DATE:
APPROVED BY		
NAME:	FIFO	DATE:

CHANGES:

REASONS:

U.S. DEPARTMENT OF TRANSPORTATION - FEDERAL AVIATION ADMINISTRATION

GLS **INSTRUMENT APPROACH PROCEDURE**

FLIGHT STANDARDS SERVICES TITLE 14 CFR PART 97.29

Bearings, headings, courses, and radials are magnetic. Elevations and altitudes are in feet, MSL, except HAT, HAA, TCH, and RA. Altitudes are minimum altitudes unless otherwise indicated. Ceilings are in feet above airport elevation. Distances are in nautical miles unless otherwise indicated, except visibilities which are in statute miles or in feet RVR.

```
HEADER                                                                                    1         1         1         1
         1         2         3         4         5         6         7         8         9         0         1         2         3
12345678901234567890123456789012345678901234567890123456789012345678901234567890123456789012345678901234567890123456789012345678901234567890123456789012
HDR      USA       HOUSTON                  TX    IAP      KIAH      GLS RWY 8R        ORIG
WAYPOINT                                                                                  1         1         1         1
         1         2         3         4         5         6         7         8         9         0         1         2         3
12345678901234567890123456789012345678901234567890123456789012345678901234567890123456789012345678901234567890123456789012345678901234567890123456789012
SUSAEAENRT   DPLOY K40    C     N29593266W095455304                     E0033     NAR           DPLOY
SUSAEAENRT   EELPO K40    C     N29593526W095320875                     E0032     NAR           EELPO
SUSAEAENRT   JELLI K40    C     N29593375W095410003                     E0033     NAR           JELLI
SUSAEAENRT   LASSY K40    C     N29593114W095513851                     E0034     NAR           LASSY
SUSAEAENRT   MATON K40    C     N29593576W095275903                     E0032     NAR           MATON
SUSAEAENRT   MKAYE K40    C     N29593498W094545507                     E0028     NAR           MKAYE
SUSAEAENRT   REIGN K40    C     N29593456W095363971                     E0033     NAR           REIGN
AIRPORT                                                                                   1         1         1         1
         1         2         3         4         5         6         7         8         9         0         1         2         3
12345678901234567890123456789012345678901234567890123456789012345678901234567890123456789012345678901234567890123456789012345678901234567890123456789012
SUSAP KIAHK4AIAH      0      120YHN29590396W095202919E005000097          1800018000C    MNAR    GEORGE BUSH INTERCONTINENTAL/H
SEGMENT                                                                                   1         1         1         1
         1         2         3         4         5         6         7         8         9         0         1         2         3
12345678901234567890123456789012345678901234567890123456789012345678901234567890123456789012345678901234567890123456789012345678901234567890123456789012
SUSAP KIAHK4FJ08R  ALASSY 010LASSYK4EA0E  A    IF                             + 07000    18000              A LS
SUSAP KIAHK4FJ08R  ALASSY 020DPLOYK4EA0E       TF                             + 07000                       A LS
SUSAP KIAHK4FJ08R  ALASSY 030JELLIK4EA0E  B    TF                                       + 05000                       A LS
SUSAP KIAHK4FJ08R  ALASSY 040REIGNK4EA0E       TF                                       + 04000
SUSAP KIAHK4FJ08R  ALASSY 050EELPOK4EA0EE      TF                                       + 03000                       A LS
SUSAP KIAHK4FJ08R  J      010EELPOK4EA0E  I    IF
SUSAP KIAHK4FJ08R  J      020MATONK4EA0E  F    TF                                       + 02000              RW08R K4PGA LS
SUSAP KIAHK4FJ08R  J      030RW08RK4PG0GY M    TF                                         00151          -
SUSAP KIAHK4FJ08R  J      040         0   M    CA                             0849      + 00296                       A LS
SUSAP KIAHK4FJ08R  J      050MKAYEK4EA0EYM     DF
SUSAP KIAHK4FJ08R  J      060MKAYEK4EA0EE  R   HM                             26520040  + 03000                       A LS
```

QUALITY CHECKED

CITY AND STATE:	ELEVATION: 97 TDZE: 96 AIRPORT NAME:	FACILITY IDENTIFIER:	PROCEDURE NO. / AMDT NO. / EFFECTIVE DATE:	SUP:
HOUSTON, TX	GEORGE BUSH INTERCONTINENTAL/HOUSTON	GIAH	GLS RWY 8R, ORIG	AMDT: NONE
				DATED:

ALL AFFECTED PROCEDURES REVIEWED? ☐ YES ☐ NO	COORDINATES OF FACILITIES	REQUIRED EFFECTIVE DATE

COORDINATED WITH:

ATA ☐ AAT ☐ ALPA ☐ APA ☐ AOPA ☐ NBAA ☐ OTHER (specify) ☐ _____

FLIGHT CHECKED BY		
NAME:	FIFO	DATE:
DEVELOPED BY		
NAME:	NFPG	DATE:
APPROVED BY		
NAME:	NFPG	DATE:

CHANGES:

REASONS:

U.S. DEPARTMENT OF TRANSPORTATION - FEDERAL AVIATION ADMINISTRATION

GLS

INSTRUMENT APPROACH PROCEDURE

FLIGHT STANDARDS SERVICES TITLE 14 CFR PART 97.29

Bearings, headings, courses, and radials are magnetic. Elevations and altitudes are in feet, MSL, except HAT, HAA, TCH, and RA. Altitudes are minimum altitudes unless otherwise indicated. Ceilings are in feet above airport elevation. Distances are in nautical miles unless otherwise indicated, except visibilities which are in statute miles or in feet RVR.

RUNWAY

```
                                                                                                   1         1         1         1
         1         2         3         4         5         6         7         8         9         0         1         2         3
123456789012345678901234567890123456789012345678901234567890123456789012345678901234567890123456789012345678901234567890123456789012
SUSAP KIAHK4GRW08R   0094020849 N29593630W095211787+0000    +00014000960000055150IIIAH1
```

PATH POINT

```
                                                                                                   1         1         1         1
         1         2         3         4         5         6         7         8         9         0         1         2         3
123456789012345678901234567890123456789012345678901234567890123456789012345678901234567890123456789012345678901234567890123456789012
SUSAP KIAHK4QJ08R  RW08R001   00GIAH1N2959362990W09521178700+000140300N2959363900W0951930950010675000000548F       5E010130
SUSAP KIAHK4QJ08R  RW08R002E      +00294+00294          20251
```

MSA

```
                                                                                                   1         1         1         1
         1         2         3         4         5         6         7         8         9         0         1         2         3
123456789012345678901234567890123456789012345678901234567890123456789012345678901234567890123456789012345678901234567890123456789012
SUSAP KIAHK4SRW08RK4PG                0   18018003125                                                                  M
```

CITY AND STATE:	ELEVATION: 97 TDZE: 96 AIRPORT NAME:	FACILITY IDENTIFIER:	PROCEDURE NO. / AMDT NO. / EFFECTIVE DATE:	SUP:
HOUSTON, TX	GEORGE BUSH INTERCONTINENTAL/HOUSTON	GIAH	GLS RWY 8R, ORIG	AMDT: NONE DATED:

ALL AFFECTED PROCEDURES REVIEWED? ☐ YES ☐ NO	COORDINATES OF FACILITIES	REQUIRED EFFECTIVE DATE

COORDINATED WITH:

ATA ☐ AAT ☐ ALPA ☐ APA ☐ AOPA ☐ NBAA ☐ OTHER (specify) ☐ _____

FLIGHT CHECKED BY		
NAME:	FIFO	DATE:
DEVELOPED BY		
NAME:	NFPG	DATE:
APPROVED BY		
NAME:	NFPG	DATE:

CHANGES:

REASONS:

STANDARD INSTRUMENT APPROACH PROCEDURE DATA RECORD

PART - A OBSTRUCTION DATA

1. APP SEGMENT	FROM	TO	OBSTRUCTION	COORDINATES	ELEV. MSL	ROC	ALT. ADJUSTMENTS	MIN. ALT.
INITIAL	LASSY	DPLOY	1. TOWER (48-009581)	295942.00N/0954758.00W	466 (5D)	1000	AT5534	7000
			2. TERRAIN	300130.00N/0955139.00W	230 (200)		AS1500	1700
INITIAL: STEPDOWN	DPLOY	JELLI	3. TOWER (48-011504)	300127.37N/0954139.62W	412 (2C)	1000	AT3588	5000
			4. TERRAIN	300015.00N/0954551.00W	201 (200)		AS1500	1700
INTERMEDIATE	JELLI	REIGN	5. TOWER (48-002815)	295941.00N/0953729.00W	517 (4D)	500	AT2983	4000
			6. TERRAIN	300109.00N/0953900.00W	171 (200)		AS1500	1700
INTERMEDIATE: STEPDOWN	REIGN	EELPO	5. TOWER (48-002815)	295941.00N/0953729.00W	517 (4D)	500	AT1983	3000
			7. TERRAIN	300133.00N/0953639.00W	158 (200)		AS1500	1700
INTERMEDIATE: STEPDOWN	EELPO	MATON	8. TOWER (48-001307)	295934.00N/0952824.00W	636 (4D)	500	AT864	2000
			9. TERRAIN	300133.00N/0953209.00W	135 (100)		AS1500	1600
FINAL	MATON	RW08R				ASC		296/200
2. PROCEDURE TURN	NA							
3. MISSED APPROACH MAP:	DA	MKAYE				ASC		3000
			10. TOWER (48-005522)	300020.16N/0951259.52W	557 (2C)	1000		1600
ELEV:	128		11. TERRAIN	300018.00N/0951551.00W	105 (100)		AS1500	1600

4. CIRCLING AREA	DISTANCE	REQUIRED	ACTUAL
CATEGORY A	1.3 NM	350	
CATEGORY B	1.5 NM	450	
CATEGORY C	1.7 NM	450	
CATEGORY D	2.3 NM	550	
CATEGORY E	4.5 NM	550	

HT. ABV. ARPT.

5. MINIMUM SAFE ALTITUDES — PRIMARY NAVAID: RW08R

SECTOR	OBSTRUCTION	BRG/DIST	ELEVATION (MSL)	M S A	SECTOR	OBSTRUCTION	BRG/DIST	ELEVATION (MSL)	M S A
360-360	TWR (48-004048)	191/ 26.1	2049 (5D)	3100					

QUALITY CHECK

CITY AND STATE	ELEVATION: 97 / AIRPORT NAME:	FACILITY	PROCEDURE AND AMENDMENT NO:	REGION
HOUSTON, TX	GEORGE BUSH INTERCONTINENTAL/HOUSTON	GIAH	GLS RWY 8R, ORIG	ASW

PART B - SUPPLEMENTAL DATA

1. COMMUNICATIONS WITH:	2. WEATHER SERVICE	3. ALTIMETER SETTING
ZHU ARTCC IAH APP CON IAH TOWER	N W S / F A A / A / C — OTHER: ASOS	SOURCE: KIAH DISTANCE: HOURS REMOTE OPERATION:
SATISFACTORY ON:		
X V H F X U H F H F	LOCATION: KIAH	ADJUSTMENT: 0

4. MONITOR STATUS	PRIMARY NAVAID:	
	MONITOR POINT:	
	HRS OPTN:	CAT 1
		CAT 3

5. APPROACH & RUNWAY LIGHTING		
	X	ALSF-2 27, 08L, 26R, 26L
		(S) SALS
	X	MALSR 15R, 08R, 09, 33R
	X	HIRL 15R, 33L, 27, 08L, 08R, 26R, 09, 26L, 15L, 33R
		MIRL
		REIL
	X	TDZ 15R, 33L, 27, 08L, 08R, 26R, 26L
	X	C/L 15R, 33L, 27, 08L, 08R, 26R, 09, 26L, 15L, 33R
	X	OTHER (SPECIFY) PAPI-4R 33L, 09 PAPI-4L 15R, 27, 08R, 26L, 15L, 33R

6. RUNWAY MARKINGS	BASIC	
	ALL WEATHER	PIR-G 15R, 27, 08L, 08R, 26R, 09, 26L, 33R
	INSTRUMENT	NPI-G 33L, 15L
7. RUNWAY VISUAL RANGE	APPROACH	15R, 33L, 27, 08L, 08R, 26R, 09, 26L, 15L, 33R
	MIDFIELD	15R, 33L, 27, 08L, 08R, 26R, 09, 26L, 15L, 33R
	ROLL OUT	15R, 33L, 27, 08L, 08R, 26R, 09, 26L, 15L, 33R

8. GLIDE PATH		
GP ANGLE: 3.00	ELEV RWY THRESHOLD: 96.3	
DISTANCE FROM RWY:	ELEV GP ANTENNA:	
	THRESHOLD CROSSING HEIGHT: 54.8	

9. FINAL APPROACH COURSE AIMING			
	X	RUNWAY THRESHOLD	FT. FROM THRESHOLD
	X	ON CENTERLINE	FT. FROM CENTERLINE

10. WAIVERS: 1

ORDER 8260.19E APPENDIX L PARA 4I; REFERENCE PATH IDENTIFIER (RPI) FORMAT.

PART D - PREPARED BY:	DATE:
SCOTT M. CORY	12/07/2011
TITLE: AERONAUTICAL INFORMATION SPECIALIST	OFFICE: AJV-353

PART C - REMARKS:

PRECIPITOUS TERRAIN EVALUATION COMPLETED.

2. KIAH ASOS ON SERVICE A; HRS OPTN: 24.

BACKUP ALTIMETER SOURCE NOT ESTABLISHED DUE TO REDUNDANT WEATHER SOURCES AT AIRPORT.

VGSI DATA: 3.00/72.40

SEE ATTACHED AIRSPACE LETTER.

8260.54A LPV (200' HATH) CRITERIA USED FOR DEVELOPMENT OF GLS (LAAS) PROCEDURES PER FPO/WORKING GROUP REQUEST.

GLS:
FINAL OCS SLOPE - 34:1

AVERAGE HIGH TEMPERATURE BASED ON 5-YEAR HISTORY (2006-2010), APPLIED TO JELLI, REIGN; AHT: 39 C; NOT APPLIED TO EELPO PER FPT/AIR TRAFFIC REQUEST TO KEEP AT EXISTING LOCATION TO DECONFLICT WITH ARRIVALS TO KDWH RWY 35L.

RWY 8R APPROACH END HAMMER HEAD PENETRATES SOUTH PORTION OF POFA. PER FPO AND ASW-652, AREA IS TO BE PROTECTED VIA TAXIWAY MARKINGS AND SIGNAGE PLAN.

CIRCLING NA PER CENTRAL FPO AND ATC REQUEST.

SIMULTANEOUS APPROACH AUTHORIZATION AND ASSOCIATED NOTES INCLUDED ON PROCEDURE; PER FPT: AIR TRAFFIC HAS CONFIRMED THAT AS OF 18 JAN 2012 GNSS IS INCLUDED IN THE SIMULTANEOUS OPERATIONS PLAN FOR GROUND-BASED AND SATELLITE-BASED INSTRUMENT FLIGHT PROCEDURES.

PROCEDURE NOT CONNECTED TO ENROUTE STRUCTURE PER FPO/AIR TRAFFIC REQUEST; RADAR REQUIRED FOR PROCEDURE ENTRY.

RADIO FIX AND HOLDING DATA RECORD

NAME: DPLOY **STATE:** TX **COUNTRY:** US

LATITUDE/LONGITUDE: 295932.66N/0954553.04W **TYPE:** WP, INT, DME

AIRSPACE DOCKET: **FIX TYPE OF ACTION:** MODIFY

FIX MAKE-UP FACILITIES:

FAC	NAME	IDENT	TYPE	CLASS	MAG BRG	TRUE BRG	DME	DIST FROM FAC NM	DIST FROM FAC FEET	MRA	MAA
1	HOUSTON	I-IAH	LOC/DME		266.94	269.94	21.16	23.06		7000	8500
2	NAVASOTA	TNV	VORTAC	H	131.18	139.18		23.39		7000	8500

EXPANDED SERVICE VOLUME (ESV):

FAC IDENT	FAC TYPE	RADIAL/BEARING	DISTANCE	MIN ALTITUDE	MAX ALTITUDE
I-IAH	LOC/DME	R-267	24	7000	8500

HOLDING: **HOLDING TYPE OF ACTION:** NO CHANGE

REMARKS:
HOUSTON (FAC 1) USED TO ESTABLISH FIX COORDINATES
I-IAH DME COORDINATES: 295938.92N-0952131.30W.

FIX USE:

USE TYPE	USE TITLE	FAC	PAT	AIRPORT IDENT	CITY	STATE
IAP	GLS RWY 8R			KIAH	HOUSTON	TX (US)
IAP	ILS OR LOC RWY 8R	1, 2		KIAH	HOUSTON	TX (US)
IAP	ILS RWY 8R (SA CAT II)	1, 2		KIAH	HOUSTON	TX (US)
IAP	RNAV (GPS) Z RWY 8R			KIAH	HOUSTON	TX (US)
IAP	RNAV (RNP) Y RWY 8R			KIAH	HOUSTON	TX (US)

REQUIRED CHARTING: IAP

COMPULSORY REPORTING POINT: NO

RECORD REVISION NUMBER: 7 **DATE OF REVISION:** 07/26/2012

REASON FOR REVISION:
REMOVED FAC 3.
ADDED DIST FROM FAC TO FAC 1 AND 2.
UPDATED FIX USE.
ADDED ESV.

DEVELOPED BY: **DATE:** 11/29/2011 **OFFICE:** AJV-353 **NAME:** JON DENTON

APPROVED BY: **DATE:** **OFFICE:** AJV-353 **NAME:** LARRY STROUT

SIGNATURE:

DISTRIBUTION:
NFDC
FPO: CEN
ARTCC: ZHU
ATC FACILITY: IAH APP CON
OTHER:

RADIO FIX AND HOLDING DATA RECORD

NAME: EELPO **STATE:** TX **COUNTRY:** US

LATITUDE/LONGITUDE: 295935.26N/0953208.75W **TYPE:** WP, INT, DME

AIRSPACE DOCKET: **FIX TYPE OF ACTION:** MODIFY

FIX MAKE-UP FACILITIES:

FAC	NAME	IDENT	TYPE	CLASS	MAG BRG	TRUE BRG	DME	DIST FROM FAC NM	DIST FROM FAC FEET	MRA	MAA
1	HOUSTON	I-IAH	LOC/DME		266.94	269.94	9.23	11.13		3000	4500
2	HOBBY	HUB	VOR/DME	H	321.26	326.26		24.31		3000	4500

HOLDING: **HOLDING TYPE OF ACTION:** NO CHANGE

REMARKS:
HOUSTON (FAC 1) USED TO ESTABLISH FIX COORDINATES
I-IAH DME COORDINATES: 295938.92N-0952131.30W

FIX USE:

USE TYPE	USE TITLE	FAC	PAT	AIRPORT IDENT	CITY	STATE
IAP	GLS RWY 8R			KIAH	HOUSTON	TX (US)
IAP	ILS OR LOC RWY 8R	1, 2		KIAH	HOUSTON	TX (US)
IAP	ILS RWY 8R (SA CAT II)	1, 2		KIAH	HOUSTON	TX (US)
IAP	RNAV (GPS) Z RWY 8R			KIAH	HOUSTON	TX (US)
IAP	RNAV (RNP) Y RWY 8R			KIAH	HOUSTON	TX (US)

REQUIRED CHARTING: IAP

COMPULSORY REPORTING POINT: NO

RECORD REVISION NUMBER: 4 **DATE OF REVISION:** 07/26/2012

REASON FOR REVISION:
REMOVE FAC 3.
ADDED DIST FROM FAC TO FAC 1 AND 2.
UPDATED FIX USE.

DEVELOPED BY: **DATE:** 11/29/2011 **OFFICE:** AJV-353 **NAME:** JON DENTON

APPROVED BY: **DATE:** **OFFICE:** AJV-353 **NAME:** LARRY STROUT

SIGNATURE:

DISTRIBUTION:
NFDC
FPO: CEN
ARTCC: ZHU
ATC FACILITY: IAH APP CON
OTHER:

QUALITY 1 CHECKED

RADIO FIX AND HOLDING DATA RECORD

NAME: JELLI **STATE:** TX **COUNTRY:** US

LATITUDE/LONGITUDE: 295933.75N/0954100.03W **TYPE:** WP, INT, DME

AIRSPACE DOCKET: **FIX TYPE OF ACTION:** MODIFY

FIX MAKE-UP FACILITIES:

FAC	NAME	IDENT	TYPE	CLASS	MAG BRG	TRUE BRG	DME	DIST FROM FAC NM	DIST FROM FAC FEET	MRA	MAA
1	HOUSTON	I-IAH	LOC/DME		266.94	269.94	16.91	18.82		5000	7000
2	HOBBY	HUB	VOR/DME	H	308.65	313.65		29.28		5000	7000

EXPANDED SERVICE VOLUME (ESV):

FAC IDENT	FAC TYPE	RADIAL/BEARING	DISTANCE	MIN ALTITUDE	MAX ALTITUDE
I-IAH	LOC/DME	R-267	19	5000	7000

HOLDING: **HOLDING TYPE OF ACTION:** NO CHANGE

REMARKS:
HOUSTON (FAC 1) USED TO ESTABLISH FIX COORDINATES
I-IAH DME COORDINATES: 295938.92N-0952131.30W.
ESV I-IAH GS: 267/18/50/70

FIX USE:

USE TYPE	USE TITLE	FAC	PAT	AIRPORT IDENT	CITY	STATE
IAP	GLS RWY 8R			KIAH	HOUSTON	TX (US)
IAP	ILS OR LOC RWY 8R	1, 2		KIAH	HOUSTON	TX (US)
IAP	ILS RWY 8R (SA CAT II)	1, 2		KIAH	HOUSTON	TX (US)
IAP	RNAV (GPS) Z RWY 8R			KIAH	HOUSTON	TX (US)
IAP	RNAV (RNP) Y RWY 8R			KIAH	HOUSTON	TX (US)

REQUIRED CHARTING: IAP

COMPULSORY REPORTING POINT: NO

RECORD REVISION NUMBER: 8 **DATE OF REVISION:** 07/26/2012

REASON FOR REVISION:
FIX MOVED 1.40 NM WEST.
UPDATED FIX COORDINATES.
CHANGED FAC 1 DME FROM 15.52 TO 16.91.
CHANGED FAC 2 TRUE BRG FROM 315.61 TO 313.65.
REMOVED FAC 3.
ADDED DIST FROM FAC TO FAC 1 AND 2.
ADDED ESV DATA.
UPDATED FIX USE.

DEVELOPED BY: **DATE:** 11/29/2011 **OFFICE:** AJV-353 **NAME:** JON DENTON

APPROVED BY: **DATE:** **OFFICE:** AJV-353 **NAME:** LARRY STROUT

SIGNATURE:

DISTRIBUTION:
NFDC
FPO: CEN
ARTCC: ZHU
ATC FACILITY: IAH APP CON
OTHER:

QUALITY 1 CHECKED

RADIO FIX AND HOLDING DATA RECORD

NAME: LASSY **STATE:** TX **COUNTRY:** US

LATITUDE/LONGITUDE: 295931.14N/0955138.51W **TYPE:** WP, INT, DME

AIRSPACE DOCKET: **FIX TYPE OF ACTION:** MODIFY

FIX MAKE-UP FACILITIES:

FAC	NAME	IDENT	TYPE	CLASS	MAG BRG	TRUE BRG	DME	DIST FROM FAC NM	DIST FROM FAC FEET	MRA	MAA
1	HOUSTON	I-IAH	LOC/DME		266.94	269.94	26.16	28.06		7000	9000
2	NAVASOTA	TNV	VORTAC	H	141.88	149.88		20.51		7000	9000

EXPANDED SERVICE VOLUME (ESV):

FAC IDENT	FAC TYPE	RADIAL/BEARING	DISTANCE	MIN ALTITUDE	MAX ALTITUDE
I-IAH	LOC/DME	R-267	29	7000	9000

HOLDING: **HOLDING TYPE OF ACTION:** NO CHANGE

REMARKS:
HOUSTON (FAC 1) USED TO ESTABLISH FIX COORDINATES
I-IAH DME COORDINATES: 295938.92N-0952131.30W.

FIX USE:

USE TYPE	USE TITLE	FAC	PAT	AIRPORT IDENT	CITY	STATE
IAP	GLS RWY 8R			KIAH	HOUSTON	TX (US)
IAP	ILS OR LOC RWY 8R	1, 2		KIAH	HOUSTON	TX (US)
IAP	ILS RWY 8R (SA CAT II)	1, 2		KIAH	HOUSTON	TX (US)
IAP	RNAV (GPS) Z RWY 8R			KIAH	HOUSTON	TX (US)
IAP	RNAV (RNP) Y RWY 8R			KIAH	HOUSTON	TX (US)

REQUIRED CHARTING: IAP

COMPULSORY REPORTING POINT: NO

RECORD REVISION NUMBER: 1 **DATE OF REVISION:** 07/26/2012

REASON FOR REVISION:
REMOVE FAC 3.
ADDED DIST FROM FAC TO FAC 1 AND 2.
CHANGED FAC 1 MAA FROM 8500 TO 9000 FOR 318 FT/NM PLANNING.
CHANGED FAC 2 MAA FROM 8500 TO 9000.
ADDED ESV.
UPDATED FIX USE.

DEVELOPED BY: **DATE:** 11/29/2011 **OFFICE:** AJV-353 **NAME:** JON DENTON

APPROVED BY: **DATE:** **OFFICE:** AJV-353 **NAME:** LARRY STROUT

SIGNATURE:

DISTRIBUTION:
NFDC
FPO: CEN
ARTCC: ZHU
ATC FACILITY: IAH APP CON
OTHER:

RADIO FIX AND HOLDING DATA RECORD

NAME: MATON **STATE:** TX **COUNTRY:** US

LATITUDE/LONGITUDE: 295935.76N/0952759.03W **TYPE:** WP, INT, DME

AIRSPACE DOCKET: **FIX TYPE OF ACTION:** MODIFY

FIX MAKE-UP FACILITIES:

FAC	NAME	IDENT	TYPE	CLASS	MAG BRG	TRUE BRG	DME	DIST FROM FAC NM	DIST FROM FAC FEET	MRA	MAA
1	HOUSTON	I-IAH	LOC/DME		266.94	269.94	5.61	7.52	45679	2000	4500
2	HOBBY	HUB	VOR/DME	H	328.94	333.94		22.51		2000	4500

HOLDING: **HOLDING TYPE OF ACTION:** NO CHANGE

REMARKS:
PFAF DETERMINED IAW FAAO 8260.54A, FORMULA 2-16B.
I-IAH DME COORDINATES: 295938.92N-0952131.30W.

FIX USE:

USE TYPE	USE TITLE	FAC	PAT	AIRPORT IDENT	CITY	STATE
IAP	GLS RWY 8R			KIAH	HOUSTON	TX (US)
IAP	ILS OR LOC RWY 8R	1, 2		KIAH	HOUSTON	TX (US)
IAP	ILS RWY 8R (SA CAT II)	1, 2		KIAH	HOUSTON	TX (US)
IAP	RNAV (GPS) Z RWY 8R			KIAH	HOUSTON	TX (US)
IAP	RNAV (RNP) Y RWY 8R			KIAH	HOUSTON	TX (US)

REQUIRED CHARTING: IAP

COMPULSORY REPORTING POINT: NO

RECORD REVISION NUMBER: 8 **DATE OF REVISION:** 07/26/2012

REASON FOR REVISION:
FIX MOVED 437.05 FT WEST.
UPDATED FIX COORDINATES.
ADDED DIST FROM FAC TO FAC 1 AND 2.
CHANGED FAC 1 DME DIST FROM 5.54 TO 5.61.
CHANGED FAC 2 TRUE BRG FROM 334.11 TO 334.94.
DELETED FAC 3 DATA.
UPDATED FIX USE.

DEVELOPED BY: **DATE:** 11/29/2011 **OFFICE:** AJV-353 **NAME:** JON DENTON

APPROVED BY: **DATE:** **OFFICE:** AJV-353 **NAME:** LARRY STROUT

SIGNATURE:

DISTRIBUTION:
NFDC
FPO: CEN
ARTCC: ZHU
ATC FACILITY: IAH APP CON
OTHER:

QUALITY 1 CHECKED

RADIO FIX AND HOLDING DATA RECORD

NAME: MKAYE **STATE:** TX **COUNTRY:** US

LATITUDE/LONGITUDE: 295934.98N/0945455.07W **TYPE:** WP, INT, DME

AIRSPACE DOCKET: **FIX TYPE OF ACTION:** NO CHANGE

FIX MAKE-UP FACILITIES:

FAC	NAME	IDENT	TYPE	CLASS	MAG BRG	TRUE BRG	DME	DIST FROM FAC NM	DIST FROM FAC FEET	MRA	MAA
1	HOUSTON	I-JYV	LOC/DME		086.96	089.96	23.10	23.10		7000	8500
2	HOBBY	HUB	VOR/DME	H	037.95	042.95		27.63		3000	17500
3	HUMBLE	IAH	VORTAC	H	079.38	084.38	22.53	22.53		3000	17500
4	NIXIN	BVP	NDB	MH	084.99	089.99		15.62		3000	17500
5	DAISETTA	DAS	VORTAC	H	225.15	230.15		18.34		7000	8500

EXPANDED SERVICE VOLUME (ESV):

FAC IDENT	FAC TYPE	RADIAL/BEARING	DISTANCE	MIN ALTITUDE	MAX ALTITUDE
I-JYV	LOC/DME	R-087	24	7000	8500

HOLDING: **HOLDING TYPE OF ACTION:** NO CHANGE

PATTERNS:

PAT	DIR	IDENT	TYPE	RAD/CRS/BRG	CRS INBOUND	TURN (L OR R)	LEG LENGTH TIME	LEG LENGTH DME	HOLDING ALTITUDES MIN	HOLDING ALTITUDES MAX	TEMPLATES MIN	TEMPLATES MAX
1	W	IAH	VORTAC	079.38	079.38	R	1		3000	10000	5	10
2	E		WP	085.17	265.17	R		4	3000	10000	5	10
3	E	BVP	NDB	084.99	264.99	R	1		3000	10000	5	10

CONTROLLING OBSTRUCTIONS:

PAT	AIRSPEED	OBSTRUCTION	COORDINATES	ELEVATION	ACCURACY CODE
1	200	TOWER (48-003137)	300230.90N/0945216.20W	564	2C
2	200	TOWER (48-003137)	300230.90N/0945216.20W	564	2C
3	200	TOWER (48-003137)	300230.90N/0945216.20W	564	2C

HOLDING RESTRICTIONS:
HOLDING LIMITED TO ESTABLISHED PATTERNS.

REMARKS:
HOUSTON (FAC 1) USED TO ESTABLISH FIX COORDINATES
I-JYV DME COORDINATES: 295938.92N-0952131.30W.
HOLDING PAT 1 REQUESTED BY ATC.
DIVERGENCE ANGLES (TERPS PARA 287): FAC 1/5 40, FAC 2/3 41, FAC 2/4 47.
PRECIPITOUS TERRAIN EVALUATION COMPLETED.

FIX USE:

USE TYPE	USE TITLE	FAC	PAT	AIRPORT IDENT	CITY	STATE
IAP	GLS RWY 26L			KIAH	HOUSTON	TX (US)
IAP	GLS RWY 8R		2	KIAH	HOUSTON	TX (US)
IAP	ILS OR LOC RWY 26L	1, 2, 5		KIAH	HOUSTON	TX (US)
IAP	ILS OR LOC RWY 8R	2, 4	3	KIAH	HOUSTON	TX (US)
IAP	ILS RWY 26L (CAT II/III)	1, 2, 5		KIAH	HOUSTON	TX (US)
IAP	ILS RWY 26L (SA CAT I)	1, 2, 5		KIAH	HOUSTON	TX (US)
IAP	ILS RWY 8R (SA CAT II)	2, 4	3	KIAH	HOUSTON	TX (US)
IAP	RNAV (GPS) RWY 26L			KIAH	HOUSTON	TX (US)
IAP	RNAV (GPS) Z RWY 8R		2	KIAH	HOUSTON	TX (US)
IAP	RNAV (RNP) Y RWY 8R		2	KIAH	HOUSTON	TX (US)

REQUIRED CHARTING: IAP

COMPULSORY REPORTING POINT: NO

RECORD REVISION NUMBER: 7 **DATE OF REVISION:** 07/26/2012

REASON FOR REVISION:
REMOVED FIX RESTRICTIONS.
UPDATED FIX USE.

DEVELOPED BY: **DATE:** 11/29/2011 **OFFICE:** AJV-353 **NAME:** SCOTT CORY

APPROVED BY: **DATE:** **OFFICE:** AJV-353 **NAME:** LARRY STROUT

SIGNATURE:

QUALITY 1 CHECKED

DISTRIBUTION:
NFDC
FPO: CEN
ARTCC: ZHU
ATC FACILITY: IAH APP CON

OTHER:

QUALITY 1 CHECKED

RADIO FIX AND HOLDING DATA RECORD

NAME: REIGN **STATE:** TX **COUNTRY:** US

LATITUDE/LONGITUDE: 295934.56N/0953639.71W **TYPE:** WP, INT, DME

AIRSPACE DOCKET: **FIX TYPE OF ACTION:** ESTABLISH

FIX MAKE-UP FACILITIES:

FAC	NAME	IDENT	TYPE	CLASS	MAG BRG	TRUE BRG	DME	DIST FROM FAC NM	DIST FROM FAC FEET	MRA	MAA
1	HOUSTON	I-IAH	LOC/DME		266.94	269.94	13.15	15.05		4000	4500
2	HOBBY	HUB	VOR/DME	H	314.24	319.24		26.69		4000	4500

REMARKS:
HOUSTON (FAC 1) USED TO ESTABLISH FIX COORDINATES
I-IAH DME COORDINATES: 295938.92N-0952131.30W.

FIX USE:

USE TYPE	USE TITLE	FAC	PAT	AIRPORT IDENT	CITY	STATE
IAP	GLS RWY 8R			KIAH	HOUSTON	TX (US)
IAP	ILS OR LOC RWY 8R	1, 2		KIAH	HOUSTON	TX (US)
IAP	ILS RWY 8R (SA CAT II)	1, 2		KIAH	HOUSTON	TX (US)
IAP	RNAV (GPS) Z RWY 8R			KIAH	HOUSTON	TX (US)
IAP	RNAV (RNP) Y RWY 8R			KIAH	HOUSTON	TX (US)

REQUIRED CHARTING: IAP

COMPULSORY REPORTING POINT: NO

RECORD REVISION NUMBER: ORIG **DATE OF REVISION:** 07/26/2012

DEVELOPED BY: **DATE:** 11/29/2011 **OFFICE:** AJV-353 **NAME:** SCOTT CORY

APPROVED BY: **DATE:** **OFFICE:** AJV-353 **NAME:** LARRY STROUT

SIGNATURE:

DISTRIBUTION:
NFDC
FPO: CEN
ARTCC: ZHU
ATC FACILITY: IAH APP CON
OTHER:

QUALITY 1 CHECKED

TERMINAL AIRSPACE DATA REQUIREMENTS

CITY: **HOUSTON** STATE: **TX**

AIRPORT NAME: **GEORGE BUSH INTERCONTINENTAL/HOUSTON** ID: **KIAH**

PROCEDURE: **GLS RWY 8R** AMDT: **ORIG**

DOCKET#: **NOT REQUIRED**
(96-AXX-X/Required/Not Required)

ALL DIST TO 1/100 NM; ELEV TO NEAREST FT; COORD TO 1/100 SEC; DEG TO 1/100 DG.

1. Distance from **THLD** to 1000' point **2.98**
   (Enter THLD, FAF, ARP, FACILITY, as appropriate)
2. Width of **FINAL** segment at 1000' point **0.86**
   (Enter appropriate segment, final, intermediate, etc.)
3. True Course of **FINAL** segment containing 1000' point **089.88**
4. High Terrain in **FINAL** segment containing 1000' point **124**
5. Distance from **THLD** to 1500' point **4.55**
   (If 1500' point in PT maneuvering area or holding pattern note in remarks)
6. Width of **FINAL** segment at 1500' point **1.20**
7. True Course of **FINAL** segment containing 1500' point **089.88**
8. High Terrain in **FINAL** segment containing 1500' point **124**
9. Threshold Coordinates (if straight-in) ... **295936.30N / 0952117.87W**
10. ARP Coordinates ..... **295903.96N / 0952029.19W**
11. Runway Approach End and distance furthest from ARP ..... RWY **27**
    Distance **2.07** NM
12. FAF Coordinates ..... **295935.76N / 0952759.03W**

REMARKS: Approach/Drawing attached.

US Department of Transportation
Federal Aviation Administration

FLIGHT PROCEDURES STANDARDS WAIVER

FLIGHT STANDARDS USE ONLY

CONTROL NO:

1. Flight Procedure Identification:
Houston, TX (IAH)
George Bush Intercontinental/Houston
GLS RWY 8R

2. Waiver Required and Applicable Standard:
8260.19E APPENDIX L PARA 4i; Reference Path Identifier (RPI). "For ground based augmentation systems (e.g., LAAS) the identifier is defined with a "G" followed by the runway number. The last character, beginning with the letter "A," excluding the letters "C," "L," and "R," will be used to define the first procedure, followed by a succeeding letter for each procedure to a particular runway."

3. Reason for Waiver *(Justification for nonstandard treatment)*:
The current RPI methodology allows multiple procedures at different airports located within the GBAS facility service volume to have the same RPI. For future application of GBAS RPI, Spectrum Engineering and GBAS program office have requested a new format which provides a unique RPI for all procedures at all airports within GBAS facility service volume. New RPI format is still defined with a "G", but is followed by the corresponding ILS system identifier for that runway. RPI for KIAH, GLS RWY 8R: GIAH.

4. Equivalent Level of Safety Provided:

1. The change of RPI methodology supports current systems and future GBAS authentication.

2. Only a small number of aircraft are currently equipped to fly GLS approach procedures.

3. Air carriers must obtain FAA authorization via Operations Specifications (C052) to fly GLS procedures.

5. How Relocation or Additional Facilities Will Affect Waiver Requirement:
N/A

6. Coordination With User Organizations *(Specify)*:

AJV-353: _____

7. SUBMITTED BY

DATE:	Office Identification:	Title:	Signature:
	AJV-35	**Manager, Terminal Products Group**	**Greg Yamamoto**

FAA FORM 8260 - 1 / July 2003 (computer generated)

8. CONTINUATION
Comments:

9. AFS ACTION		
		Approved
		Disapproved
		Not Required

Comments:

Date:	Routing Symbol:	Signature: